DVD Micro System

MCD703

all versions

Service
Service
Service

Service Manual

TABLE OF CONTENTS

Handling chip components 1-1
Information about lead-free soldering 1-2

Technical specification....2-1
Service tools 2-1
Service measurement setup 2-2

Connections and controls ....3-1...3-3
Troubleshooting....3-4...3-5

Disassembly diagram ....4-1...4-2

Software version and upgrading 5-1
Set block diagram 5-2
Set wiring diagram 5-3

VFD / KEY BOARD ASSEMBLY
circuit diagram 6-1
layout diagram 6-2

TUNER BOARD
circuit diagram 7-1
layout diagram 7-2

DVD BLOCK
circuit diagram 8-1
layout diagram 8-2

AMP BLOCK
circuit diagram 9-1
layout diagram 9-2

DVD MPEG BOARD
circuit diagram ....10-1...10-5
layout diagram 10-6

Exploded view diagram....11-1
Mechanical partslist 11-2

Electrical partslist....12-1...12-3
Revision list....13-1

CLASS 1
LASER PRODUCT

© Copyright 2006 Philips Consumer Electronics B.V. Eindhoven, The Netherlands
All rights reserved. No part of this publication may be reproduced, stored in a retrieval system or transmitted, in any form or by any means, electronic, mechanical, photocopying, or otherwise without the prior permission of Philips.

Published by LX 0610 Service Audio Printed in The Netherlands Subject to modification

GB 3141 785 30931

Version 1.1

PHILIPS

HANDLING CHIP COMPONENTS

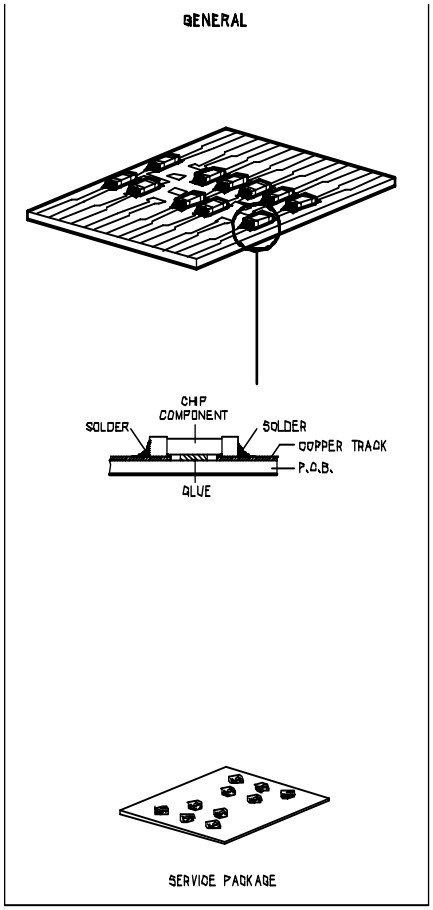

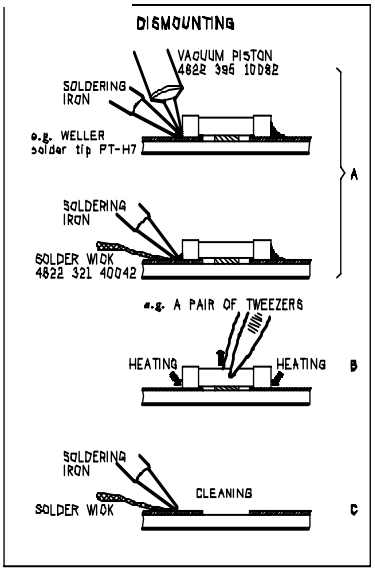

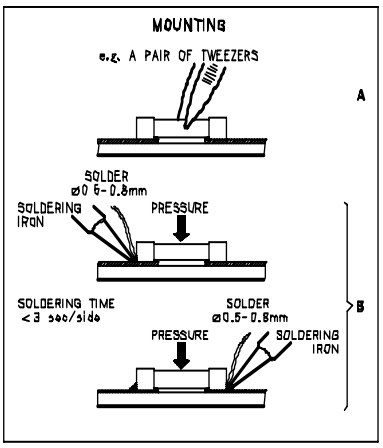

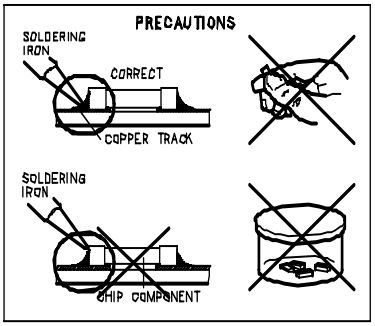

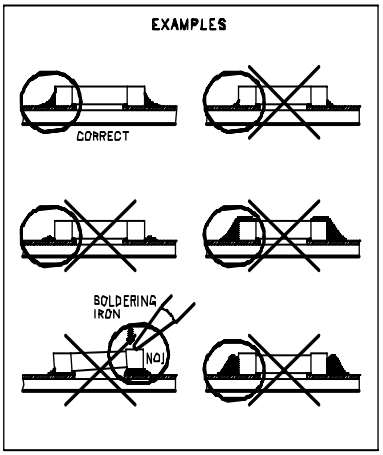

GD WARNING
All ICs and many other semiconductors are susceptible to electrostatic discharges (ESD). Careless handling during repair can reduce life drastically.
When repairing, make sure that you are connected with the same potential as the mass of the set via a wristband with resistance. Keep components and tools at this potential.

ESD

NL WAARSCHUWING
Alle IC´s en vele andere halfgeleiders zijn gevoelig voor electrostatische ontladingen (ESD).
Onzorgvuldig behandelen tijdens reparatie kan de levensduur drastisch doen verminderen. Zorg ervoor dat u tijdens reparatie via een polsband met weerstand verbonden bent met het zelfde potentiaal als de massa van het apparaat.
Houd componenten en hulpmiddelen ook op ditzelfde potentiaal.

F ATTENTION
Tous les IC et beaucoup d´autres semi-conducteurs sont sensibles aux décharges statiques (ESD). Leur longévité pourrait être considérablement écourtée par le fait qu´aucune précaution n´est prise à leur manipulation.
Lors de réparations, s´assurer de bien être relié au même potentiel que la masse de l´appareil et enfiler le bracelet serti d´une résistance de sécurité.
Veiller à ce que les composants ainsi que les outils que l´on utilise soient également à ce potentiel.

D WARNUNG
Alle ICs und viele andere Halbleiter sind empfindlich gegenüber elektrostatischen Entladungen (ESD).
Unsorgfältige Behandlung im Reparaturfall kann die Lebensdauer drastisch reduzieren.
Sorgen Sie dafür, daß Sie im Reparaturfall über ein Pulsarmband mit Widerstand mit dem Massepotential des Gerätes verbunden sind.
Halten Sie Bauteile und Hilfsmittel ebenfalls auf diesem Potential.

I AVVERTIMENTO
Tutti IC e parecchi semi conduttori sono sensibili alle scariche statiche (ESD).
La loro longevità potrebbe essere fortemente ridotta in caso di non osservazione della più grande cautela alla loro manipolazione. Durante le riparationi occorre quindi essere collegato allo stesso potenziale che quello della massa dell'apparecchio tramite un braccialetto a resistenza
Assicurarsi che i componenti e anche gli utensili con quali si lavora siano anche a questo potenziale.

SAFETY

GB
Safety regulations require that the set be restored to its original condition and that parts which are identical with those specified be used.
Safety components are marked by the symbol ⚠

F
Les normes de sécurité exigent que l'appareil soit remis à l'état d'origine et que soient utilisées les pièces de rechange identiques à celles spécifiées.
Les composants de sécurité sont marqués ⚠

D
Bei jeder Reparatur sind die geltenden Sicherheitsvorschriften zu beachten. Der Originalzustand des Gerätes darf nicht verändert werden. Für Reparaturen sind Originalersatzteile zu verwenden.
Sicherheitsbauteile sind durch das Symbol ⚠ markiert.

NL
Veiligheidsbepalingen vereisen, dat het apparaat in zijn oorspronkelijke toestand wordt teruggebracht en dat onderdelen, identiek aan de gespecificeerde, worden toegepast.
De Veiligheidsonderdelen zijn aangeduid met het symbool ⚠

I
Le norme di sicurezza esigono che l'apparecchio venga rimesso nelle condizioni originali e che siano utilizzati i pezzi di ricambiago identici a quelli specificati.
Componenty di sicurezza sono marcati con ⚠

CLASS 1 LASER PRODUCT

GB DANGER: Invisible laser radiation when open. AVOID DIRECT EXPOSURE TO BEAM.

S Varning !
Osynlig laserstrålning när apparaten är öppnad och spärren är urkopplad. Betrakta ej strålen.

DK Advarsel !
Usynlig laserstråling ved åbning når sikkerhedsafbrydere er ude af funktion. Undgå udsættelse for stråling.

FIN Varoitus !
Avatussa laitteessa ja suojalukituksen ohitettaessa olet alttiina näkymättömälle laserisätelylle. Älä katso säteeseen !

GB
After servicing and before returning the set to customer perform a leakage current measurement test from all exposed metal parts to earth ground, to assure no shock hazard exists.
The leakage current must not exceed 0.5mA.

F
"Pour votre sécurité, ces documents doivent être utilisés par des specialistes agréés, seuls habilités à réparer votre appareil en panne".

INFORMATION ABOUT LEAD-FREE SOLDERING

Philips CE is producing lead-free sets from 1.1.2005 onwards.
IDENTIFICATION:

Regardless of special logo (not always indicated) one must treat all sets from 1 Jan 2005 onwards, according next rules:

Example S/N:

Bottom line of typeplate gives a 14-digit S/N. Digit 5&6 is the year, digit 7&8 is the week number, so in this case 2005 wk12

So from 0501 onwards = from 1 Jan 2005 onwards

Important note : In fact also products of year 2004 must be treated in this way as long as you avoid mixing solder-alloys (leaded/lead -free). So best to always use SAC305 and the higher temperatures belong to this.

Due to lead-free technology some rules have to be respected by the workshop during a repair:

- Use only lead-free solder alloy Philips SAC305 with order code 0622 149 00106. If lead-free solder-paste is required, please contact the manufacturer of your solder-equipment. In general use of solder-paste within workshops should be avoided because paste is not easy to store and to handle.

- Use only adequate solder tools applicable for lead-free solder alloy. The solder tool must be able
  - To reach at least a solder-temperature of 400°C,
  - To stabilize the adjusted temperature at the solder-tip
  - To exchange solder-tips for different applications.
- Adjust your solder tool so that a temperature around 360°C – 380°C is reached and stabilized at the solder joint. Heating-time of the solder-joint should not exceed ~ 4 sec. Avoid temperatures above 400°C otherwise wear-out of tips will rise drastically and flux-fluid will be destroyed. To avoid wear-out of tips switch off un-used equipment, or reduce heat.
- Mix of lead-free solder alloy / parts with leaded solder alloy / parts is possible but PHILIPS recommends strongly to avoid mixed solder alloy types (leaded and lead-free).
  If one cannot avoid or does not know whether product is lead-free, clean carefully the solder-joint from old solder alloy and re-solder with new solder alloy (SAC305).
- Use only original spare-parts listed in the Service-Manuals. Not listed standard-material (commodities) has to be purchased at external companies.
- Special information for BGA-ICs:
  - always use the 12nc-recognizable soldering temperature profile of the specific BGA (for de-soldering always use the lead-free temperature profile, in case of doubt)
  - lead free BGA-ICs will be delivered in so-called 'dry-packaging' (sealed pack including a silica gel pack) to protect the IC against moisture. After opening, dependent of MSL-level seen on indicator-label in the bag, the BGA-IC possibly still has to be baked dry. (MSL=Moisture Sensitivity Level). This will be communicated via AYS-website.
  Do not re-use BGAs at all.

- For sets produced before 1.1.2005 (except products of 2004), containing leaded solder-alloy and components, all needed spare-parts will be available till the end of the service-period. For repair of such sets nothing changes.

- On our website **www.atyourservice.ce.Philips.com** you find more information to:

  - BGA-de-/soldering (+ baking instructions)
  - Heating-profiles of BGAs and other ICs used in Philips-sets

  You will find this and more technical information within the "magazine", chapter "workshop news".

For additional questions please contact your local repair-helpdesk.

SERVICE INSTRUCTION

Safety regulations require that after a repair, the set must be returned in its original condition. Pay in particular attention to the following points:

- Route the wire trees correctly and fix them with the mounted cable clamps.
- Check the insulation of the AC Power lead for external damage.
- Check the strain relief of the AC Power cord for proper function.
- Check the electrical DC resistance between the AC Power Plug and the secondary side (only for sets which have a AC Power isolated power supply):

1. Unplug the AC Power cord and connect a wire between the two pins of the AC Power plug.
2. Set the AC Power switch to the "on" position (keep the AC Power cord unplugged!).
3. Measure the resistance value between the pins of the AC Power plug and the metal shielding of the tuner or the aerial connection on the set. The reading should be larger than 4.5 Mohm (For U.S. it should be between 4.2 Mohm and 12 Mohm).
4. Switch "off" the set, and remove the wire between the two pins of the AC Power plug.

- Check the cabinet for defects, to avoid touching of any inner parts by the customer.

GENERAL

Mains voltage	-/98/55	:	120 / 230 V
	-/37	:	120V
Mains frequency	-/98/55	:	50 / 60 Hz
	-/37	:	60 Hz
Battery	for remote	:	3V (R03, AAA x 2)
Power consumption	Max.	:	< 37 W (max.)
	Standby	:	< 5 W
	ECO	:	< 1 W
Dimension (W x H x D)			
	DVD Part	:	208 x 62 x 244 mm
	AMP Part	:	208 x 57 x 244 mm
Weight	DVD Part	:	1.4 Kg
	AMP Part	:	3.1 Kg

AMPLIFIER

Output power	:	2 x 22 W RMS
Subwoofer	:	1 x 50 W
Speaker impedance	:	2 x 8 ohm
Subwoofer	:	1 x 8 ohm
Frequency response	:	100 Hz - 20 kHz (±3dB)
Subwoofer	:	40 Hz - 180 Hz (±3dB)
Aux input sensitivity	:	350 mV (600 ohm)

TUNER - FM SECTION

Tuning range	100kHz	:	87.5 - 108 MHz
IF frequency		:	10.7 MHz ± 0.02 MHz
Sensitivity		:	22 dBf at 26dB S/N
Selectivity		:	20 dB at 300kHz
IF rejection		:	50 dB
Image rejection		:	20 dB

TUNER - AM SECTION

Tuning range	MW(9 kHz)	:	531 - 1602 kHz
	AM(10 kHz)	:	520 - 1710 kHz
IF frequency		:	450 kHz ± 1 kHz
Sensitivity	MW	:	4000 µV/m at 26dB S/N
Selectivity	MW	:	16 dB
IF rejection	MW	:	24 dB
Image rejection	MW	:	20 dB

DVD / MP3 / CD

Laser Type	:	Semiconductor
Disc Diameter	:	12cm / 8cm
Video Decoding	:	MPEG-2 / MPEG-1
Signal System	:	PAL / NTSC
Video S/N	:	53 dB (min.)
Composite Video Output	:	1.0 Vp-p, 75
S-Video Output	:	Y - 1.0 Vp-p, 75 C - 0.286 Vp-p, 75
Audio DAC	:	24 Bits / 96 kHz
Frequency Response	:	4 Hz - 20 kHz (44.1kHz) 4 Hz - 22 kHz (48kHz) 4 Hz - 44 kHz (96kHz)
Digital Output	:	SPDIF (Sony Philips digital interface) Coaxial
No. of programmable tracks	:	20
Signal-to-noise ratio	:	50 dBA
Channel separation	:	40 dB (1 kHz)
Total harmonic distortion	:	< 0.02% (1 kHz)

TFT LCD PANEL

Number of pixels(HXV)		:	280x220
Brightness	dark room	:	>150cd/m2
Contrast	dark room	:	150 :1

LOUDSPEAKERS

2-way bass reflex system		
Dimension (W x H x D)	:	145 x 230 x 210 mm
Weight	:	2.4 Kg each

SUBWOOFER

Dimension (W x H x D)	:	80 x 270 x 330 mm
Weight	:	4.4 Kg

SERVICE TOOLS

Audio signal disc SBC 429.....4822 397 30184
Playability test disc SBC 444.....4822 397 30245
Test disc 5 (disc without errors) +
Test disc 5A (disc with dropout errors, black spots and fingerprints)
SBC 426/426A.....4822 397 30096
Burn in test disc (65 min. 1kHz signal at -30 dB level without “pause”).....4822 397 30155

AVAILABLE ESD PROTECTION EQUIPMENT

anti-static table mat	large 1200x650x1.25mm	4822 466 10953
	small 600x650x1.25m	4822 466 10958
anti-static wristband		4822 395 10223
connection box (3 press stud connections, 1MΩ)		4822 320 11307
extendible cable (2m, 2MΩ, to connect wristband to connection box)		4822 320 11305
connecting cable (3m, 2MΩ, to connect table mat to connection box)		4822 320 11306
earth cable (1MΩ, to connect any product to mat or to connection box)		4822 320 11308
KIT ESD3 (combining all 6 prior products - small table mat)		4822 310 10671
wristband tester		4822 344 13999

SERVICE MEASUREMENT

Tuner SW

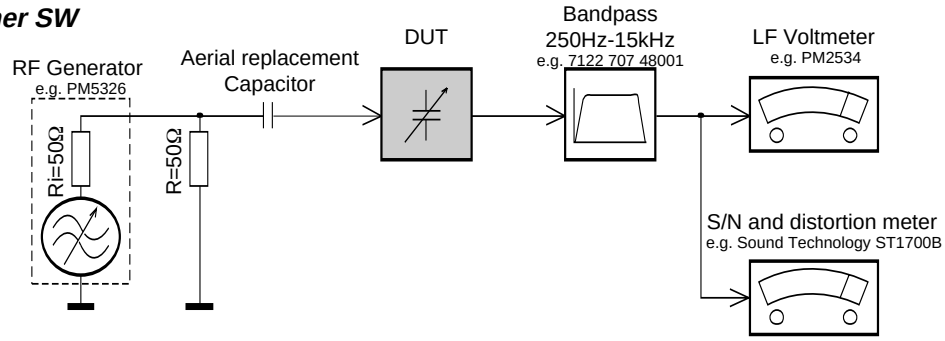

To avoid atmospheric interference all AM-measurements have to be carried out in a Faraday«s cage.
Use a bandpass filter (or at least a high pass filter with 250Hz) to eliminate hum (50Hz, 100Hz).

Tuner AM (MW,LW)

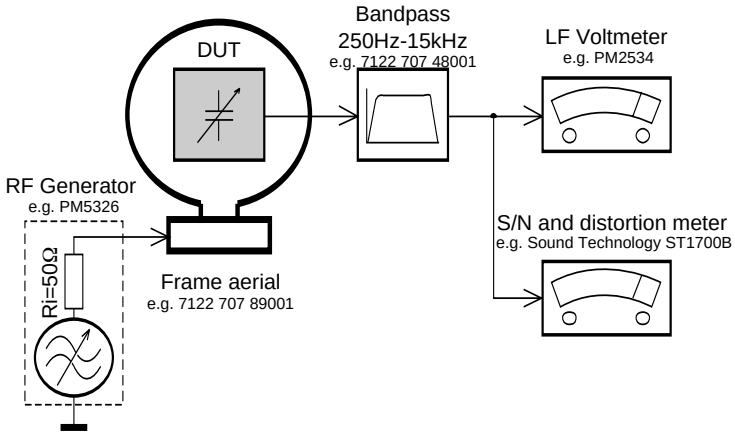

To avoid atmospheric interference all AM-measurements have to be carried out in a Faraday«s cage.

CD

Use Audio Signal Disc SBC429 4822 397 30184 (replaces test disc 3)
L.P.F. = 13 th order filter 4822 395 30204

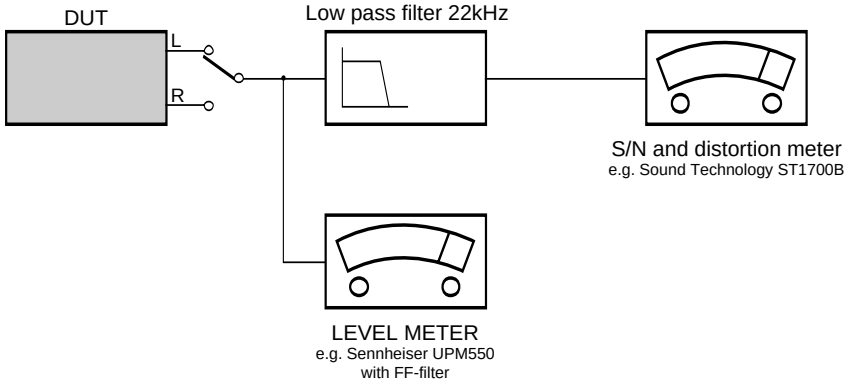

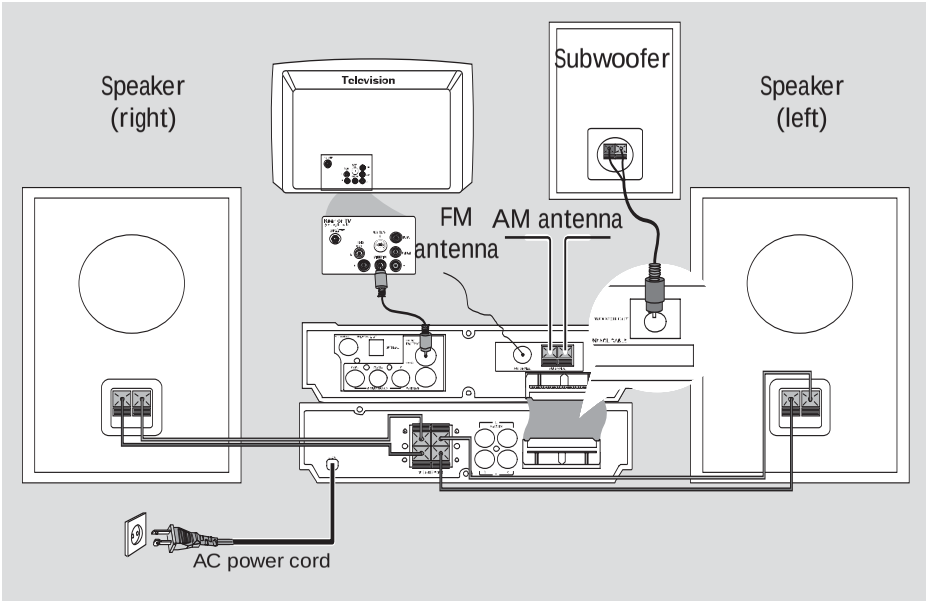

IMPORTANT!
– The type plate is located at the bottom of the system.
– Before connecting the AC power cord to the wall outlet, ensure that all other connections have been made.
– Never make or change any connections with the power switched on.

Connecting the speakers

① Connect the two front speakers to the SPEAKERS (8ohm) terminals with two speaker cables. Right speaker to "R" and left speaker to "L", red wire to "+" and silver wire to "-". Fully insert the stripped portion of the speaker wire into the terminal as shown.

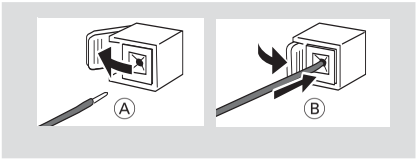

② Connect the passive subwoofer to the WOOFER OUT (8ohm) terminal with the supplied subwoofer cable by matching the plug types.

Notes:
– Ensure that the speaker cables are correctly connected. Improper connections may damage the system due to short-circuit.
– For optimal sound performance, use the supplied speakers.
– Do not connect more than one speaker to any one pair of +/- speaker jacks.
– Do not connect speakers with an impedance lower than the speakers supplied. Please refer to the SPECIFICATIONS section of this manual.

Connecting antennas

Connect the supplied AM antenna and FM antenna to the respective terminals. Adjust the position of the antenna for optimal reception.

AM Indoor Antenna

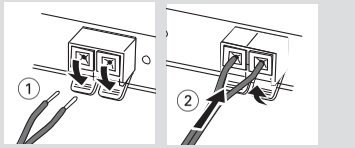

Position the antenna as far as possible from a TV, VCR or other radiation source.

FM Indoor Antenna

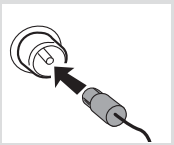

For better FM stereo reception, connect an outdoor FM antenna to the FM AERIAL (FM ANTENNA) terminal.

Connecting the control cable

Connect the serial port marked "**CONTROL CABLE**" at the rear of the DVD player to the same port at the rear of the power amplifier with the supplied flat control cable.

Connecting a TV

You must connect a TV to your DVD micro system in order to view the DVD/VCD playback.

IMPORTANT!
– There are various ways to connect the system to a TV. You only need to make one of the best connections, depending on the capabilities of your TV system.
– If COMPOMENT video output jacks or S-Video jack is used for video connection, the system's Component setting will need to be set accordingly. Details are shown under "Video Setup Page".

Connect the **VIDEO OUTPUT** jack to the video input jack on the TV using a video cable (yellow).

OR
Option 1
Connect the **S-VIDEO** output jack to the S-Video input jack on the TV using an S-Video cable (not supplied).

OR
Option 2
Use the component video cables (red/blue/green) to connect the DVD micro system's COMPONENT video output jacks to the corresponding component video input jacks (or labeled as **Pr/Cr Pb/Cb Y** or **YUV**) on the TV.

IMPORTANT!
– The progressive scan video quality is only possible when using Y Pb Pr and a progressive scan TV is required. (Proceed to page 17-18 for detailed Progressive Scan setup.)

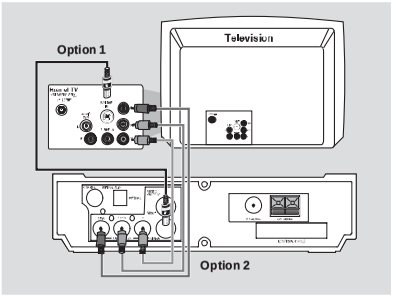

Note:
– To avoid magnetic interference, do not position the front speakers too close to your TV.

Connections

Connecting the power cord

After everything is connected properly, plug in the AC power cord to the power outlet.
Never make or change any connection with the power switched on.

Connecting additional equipment

IMPORTANT!
– Some discs are copy-protected. You cannot record the disc through a VCR or digital recording device.
– When making connections, make sure the colour of cables matches the colour of jacks.
– Always refer to the owner's manual of the other equipment for complete connection and usage details.

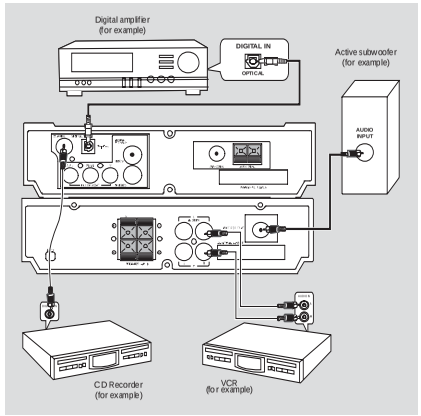

Viewing and listening to the playback of other equipment

Connect the system's **AUX IN (R/L)** jacks to the **AUDIO OUT** jacks on the other audio/visual device (such as a TV, VCR, Laser Disc player or cassette deck).
Before starting operation, press **AUX** on the remote repeatedly in order to activate the input source (**AUX1** or **AUX2**).

Connecting an active subwoofer

Connect the DVD micro system's **WOOFER OUT** jack to the AUDIO INPUT jack on an active woofer (not supplied).

Recording (digital)

Connect the system's **DIGITAL OUT (COAXIAL or OPTICAL)** jack to the DIGITAL IN jack on a digital recording device (such as DTS-Digital Theatre compatible, with Dolby Digital decoder).
Before starting operation, set SPDIF according to the audio connection. (See "**SPDIF Setup**").

Connecting a digital amplifier

Connect the **DIGITAL OUT (COAXIAL or OPTICAL)** port to the coaxial/optical input jack of a digital amplifier with a coaxial/optical cable (not supplied) for superior digital sound effect.

Functional Overview

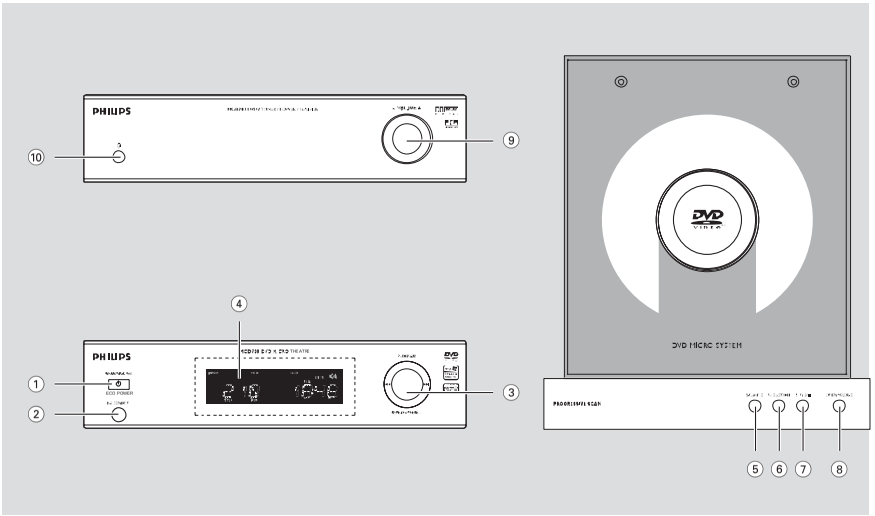

DVD player and power amplifier

① **ECO POWER/STANDBY ON** ⏻
– to switch the system on or to Eco power/normal standby mode.

② **IR SENSOR**
– point the remote control towards this sensor.

③ **Control knob**

|◄◄ / ►►|
Disc ..... press the control knob to the left/right to skip to the previous/ next chapter/title/track.
Tuner ..... press the control knob to the left/right to tune to a higher/ lower radio frequency.
..... press and hold, then release the key to start automatic search for a radio frequency downward/ upward.

PROGRAM
DVD/VCD/CD press the control knob upward to enter the program menu.
MP3/WMA-CD
..... press the control knob upward to add/delete a programmed track to/from the program list.
Picture CD ..... **during playback**, press the control knob upward to select a slide show mode.
Tuner ..... press the control knob upward to program preset radio stations.

REPEAT•STEREO
Disc ..... press the control knob downward to repeat a track or disc.
FM ..... press the control knob downward to set stereo or mono sound mode.

④ **Display**
– shows the current status of the DVD player.

⑤ **SOURCE**
– selects the respective sound source: DVD/ AUX1/AUX2/TUNER.
– switches the system on.

⑥ **PRESET/ ►II**
– Disc: starts or interrupts disc playback
– TUNER: selects a preset radio station

⑦ **BAND/■**
– Disc: stops disc playback or erases a program.
– TUNER: switches between AM and FM.

⑧ **OPEN•CLOSE**
– opens or closes the disc compartment.

⑨ **VOLUME -/+**
– adjusts the volume upward/downward.
– adjusts the hours and minutes in clock/timer setting mode.
– switches the set timer ON or OFF.

⑩ 🎧
– connect a headphone

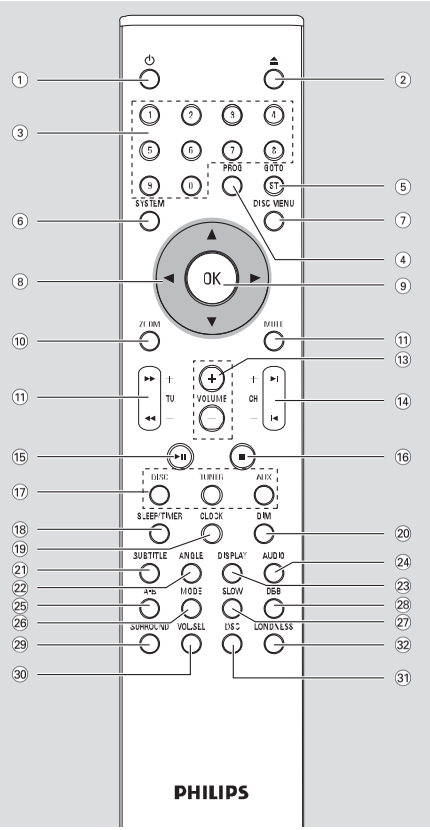

Remote control

① ⏻
– to switch the system on or to Eco power/normal standby mode.

② ⏏
– opens or closes the disc compartment

③ **Numeric Keypad (0-9)**
– inputs a track/title/chapter number of the disc.
– inputs the number of a preset radio station.

④ **PROG**
– DVD/VCD/CD: enters the program menu.
– MP3/WMA-CD: adds/deletes a programmed track to/from the program list.
– Picture CD: **during playback**, to select a slide show mode.
– Tuner: programs preset radio stations.

⑤ **GOTO/ST**
– Disc: fast searches in a disc by entering a time, title, chapter or track.
– FM: sets stereo or mono sound mode.

⑥ **SYSTEM (disc mode only)**
– enters or exits the system menu.

⑦ **DISC MENU (disc mode only)**
– DVD/VCD: enters or exits the disc contents menu.
– VCD2.0: switches the playback control mode on or off .
– MP3/WMA: switches between Album and Filelist.

⑧ **▼ / ▲ / ► / ◄**
– selects an item in a menu.
– moves an enlarged picture up/down/left/right.

⑨ **OK**
– confirms a selection.

⑩ **ZOOM**
– DVD/VCD/Picture CD: enlarges or reduces a picture or active image on the TV screen.

⑪ **MUTE**
– disables or enables sound output.

Functional Overview

⑫ **TU +/- (◄◄ / ►►)**

Tuner
– press to tune to a lower/higher radio frequency gradually.
– press and hold, then release the key to start automatic search for a radio frequency downward/upward.

Disc
– searches backward/forward in a disc at different speeds.

⑬ **VOLUME +/-**
– adjusts the volume upward/downward.
– adjusts the hours and minutes in clock/timer setting mode.
– switches the set timer ON or OFF.

⑭ **CH +/-** (⏮ / ⏭)
– Disc: skips to the previous/next chapter/title/track
– Tuner: selects a preset radio station.

⑮ ⏯
– starts or interrupts disc playback.

⑯ ■
– stops disc playback or erases a program.

⑰ **DISC/TUNER/AUX**
– selects the respective sound source for DVD/TUNER/AUX1/AUX2.
– exits P-SCAN (progressive scan). (for **DISC** only)

⑱ **SLEEP/TIMER**

Standby mode
– sets a time for switching on the system automatically.

Power-on mode
– sets the sleep timer function (auto off).

⑲ **CLOCK**

Standby mode
– sets the system clock.

Playback mode
– displays the system clock.

⑳ **DIM**
– selects different levels of brightness for the display screen in standby mode.

㉑ **SUBTITLE**
– selects a subtitle language.

㉒ **ANGLE**
– selects a DVD camera angle.

㉓ **DISPLAY**
– displays information on TV screen during playback

㉔ **AUDIO**

for VCD
– sets Stereo, Mono-Left or Mono-Right sound mode.

for DVD
– selects an audio language.

㉕ **A-B**
– repeats playback of a specific section on a disc.

㉖ **MODE**
– selects various repeat modes or the shuffle play mode for a disc.

㉗ **SLOW**
– selects different slow playback modes for a VCD/SVCD/DVD.

㉘ **DBB**
– enables or disables bass enhancement.

㉙ **SURROUND (unavailable for this version)**
– selects surround (Dolby Digital, DTS-Digital Theatre Systems or VSS-Virtual Surround Sound) or stereo sound effect.

㉚ **VOL.SEL (unavailable for this version)**
– selects different speaker modes.

㉛ **DSC**
– selects different types of preset sound equalizer settings (CLASSIC, JAZZ, POP or ROCK).

㉜ **LOUDNESS**
– enables or disables automatic loudness adjustment.

Troubleshooting

WARNING
Under no circumstances should you try to repair the system yourself, as this will invalidate the warranty. Do not open the system as there is a risk of electric shock.

If a fault occurs, first check the points listed below before taking the system for repair. If you are unable to remedy a problem by following these hints, consult your dealer or Philips for help.

Problem	Solution
No power.	Check if the AC power cord is properly connected. Press STANDBY ON ⏻ on the top of the DVD micro system or ⏻ on the remote to turn on the power.
No picture.	Check if the TV is switched on. Check the video connection. Press SOURCE on the top of the DVD player repeatedly to select "DVD" or press DISC on the remote. Set your TV to the correct Video In channel. This channel is usually near channel 00. Or, you may have a button on the TV remote control that selects Auxiliary or A/V IN channel. See your TV owner's manual for details. Or, change channels at the TV until you see DVD screen on the TV. If the progressive scan feature is activated but the connected TV does not support progressive signals or the cables are not connected accordingly, see page 17-18 for proper progressive scan setup or deactivate the progressive scan feature as below: 1) Turn off your TV progressive scan mode or turn on to interlaced mode. 2) Press SYSTEM on the remote to exit the system menu and then DISC to exit progressive scan.
Distorted or poor picture.	Sometimes a small amount of picture distortion may appear. This is not a malfunction. Clean the disc.
Completely distorted picture or black/ white picture.	TV has a colour system standard. If the disc's or DVD system's colour system is different than your TV's colour system, the picture may be distorted or colourless.
The aspect ratio of the screen cannot be changed even though you have set the TV shape.	The aspect ratio is fixed on the DVD disc. Depending on the TV, it may not be possible to change the aspect ratio.
No sound or distorted sound.	Adjust the volume. Check that the speakers are connected correctly. Replace the speaker cables. Disconnect the headphones. The system is in pause, slow motion or fast forward/reverse mode, press PRESET/ ⏯ (or ⏯ on the remote) to resume normal play mode.
The micro DVD player does not start playback.	Insert a readable disc with the playback side facing down. Check the disc type, colour system and regional code. Check for any scratches or smudges on the disc. Press SYSTEM MENU to turn off the setup menu screen. Cancel the parental control rating function or change the rating level. Moisture has condensed inside the system. Remove the disc and leave the system turned on for about an hour.
The DVD micro system does not respond when the buttons are pressed.	Disconnect the power plug from the outlet and insert again.
Cannot activate some features, such as Angles, Subtitles, or multi-language Audio.	Multi-language sound or subtitle is not recorded on the DVD. Changing the language for the sound or subtitle is prohibited on the DVD. The features may not be available on the disc.
Considerable noise in radio broadcasts.	Tune in to the correct frequency. Connect the antennas. Fully extend the FM wire antenna. Position for best reception and secure to a wall. Connect an outdoor FM or AM antenna. Adjust the direction and position for best reception. Place the antenna farther away from any equipment that may be causing the noise. Increase the distance between the system and your TV or other equipment.
Sound cannot be heard or is of poor quality.	

The remote control does not function.	Select the correct source (DISC or TUNER, for example) before pressing the function button. Point the remote control at the remote sensor of the unit. Reduce the distance to the player. Remove any possible obstacles. Replace the batteries with new ones. Check that the batteries are loaded correctly.
The display is dark.	Press DIM again.
Low hum or buzz sound.	Place the DVD micro system as far away as possible from electrical devices that may be causing interference.
Low bass response.	Check all speakers for correct polarity.
Unable to select Progressive Scan	Check that the output of the video signal is switched to 'Ypbpr'.

SOFTWARE VERSION AND UPGRADING

A. MPEG SOFTWARE VERSION CHECK

1. Press SYSTEM button (on the remote control) to enter general setting page.

   TV Screen shows

   ```
   TV Setting
   OSD Lang.
   Screen Saver
   ```

2. Press ► button (on the remote control) to select Preference Page.

   TV Screen shows

   ```
   TV set standard
   Sound
   Subtitle
   Language chosen by disk
   ```

3. Press "811502" button (on the remote control).

   TV Screen shows

   ```
   Ver        MCD703/xx
   Date       mmm dd yyyy
   Time       hh : mm : ss
   Region code        x
   ```

   /xx : /versiom

3. Press ▲ or ▼ button (on the remote control) to change region.
   Press OK to confirm.

B. CPU VERSION CHECK

1. Keep PLAY and STOP buttons (on the set) while plug in the power cord.

   TV Screen shows

   ```
   MCD703 V1.0
   ```

5 - 1

C. MPEG SOFTWARE UPGRADING:

1. Download the firmware for Philips support website
   http://www.philips.com/support
2. Prepare as uploading CD.
3. Load the CD in the CD Tray.
4. TV Screen shows

   ```
   Upgrade file detected
   Upgrade?
   Press PLAY to start
   Upgrading
   ```

   and upgrading will run automatically

5 - 2

SET BLOCK DIAGRAM

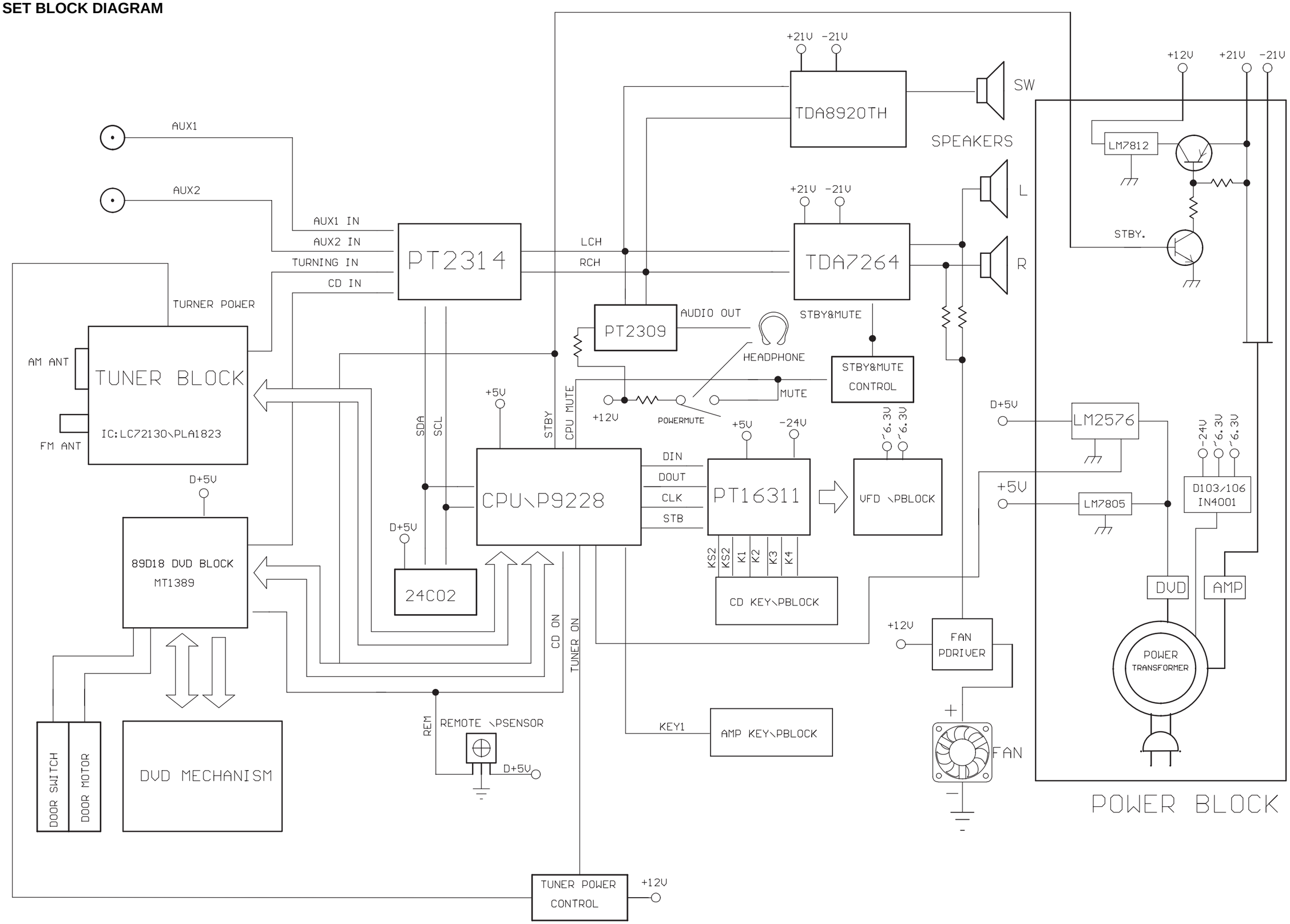

5 - 3

SET WIRING DIAGRAM

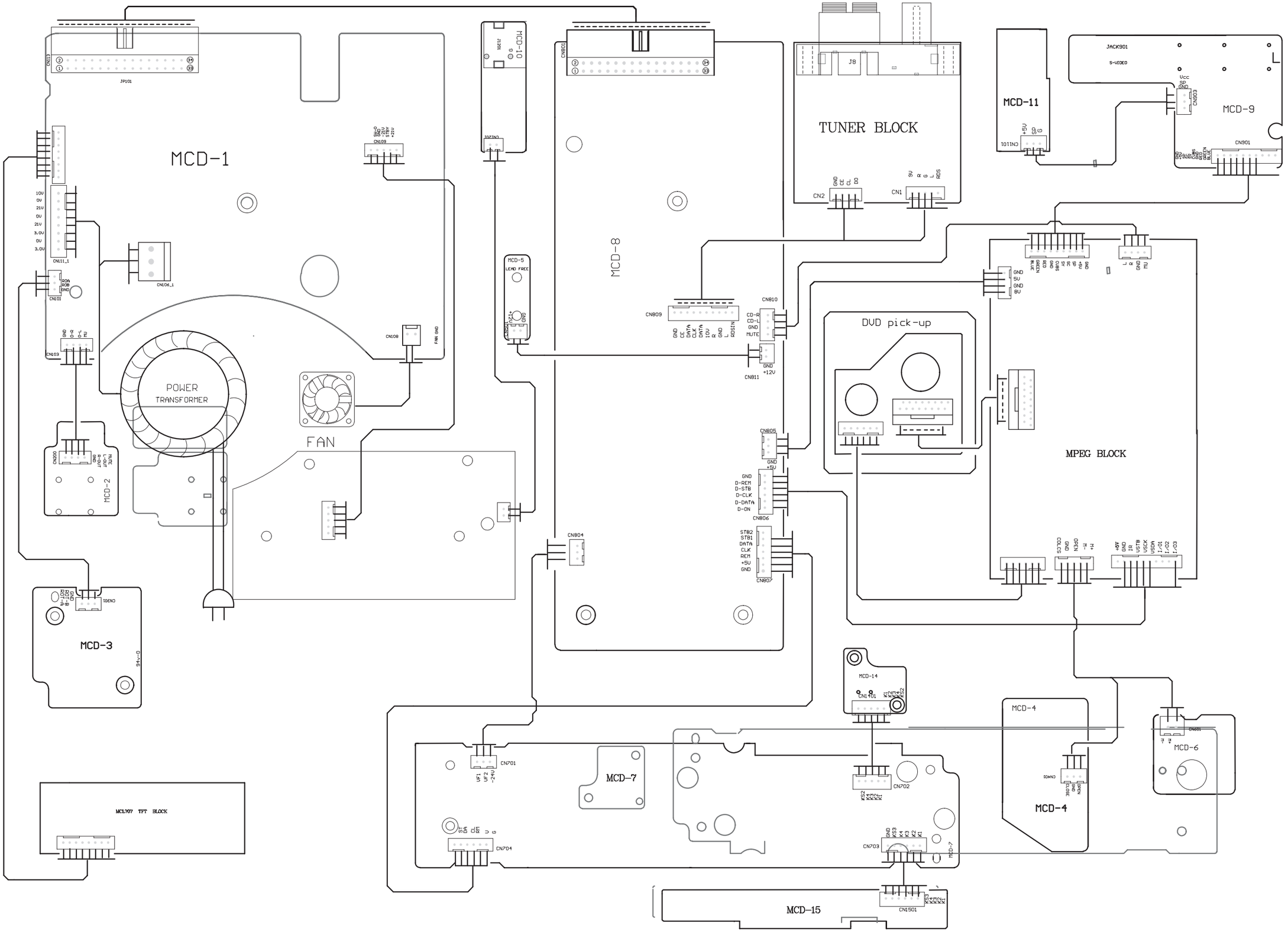

6 - 1

CIRCUIT DIAGRAM - VFD / KEY BOARD ASSEMBLY

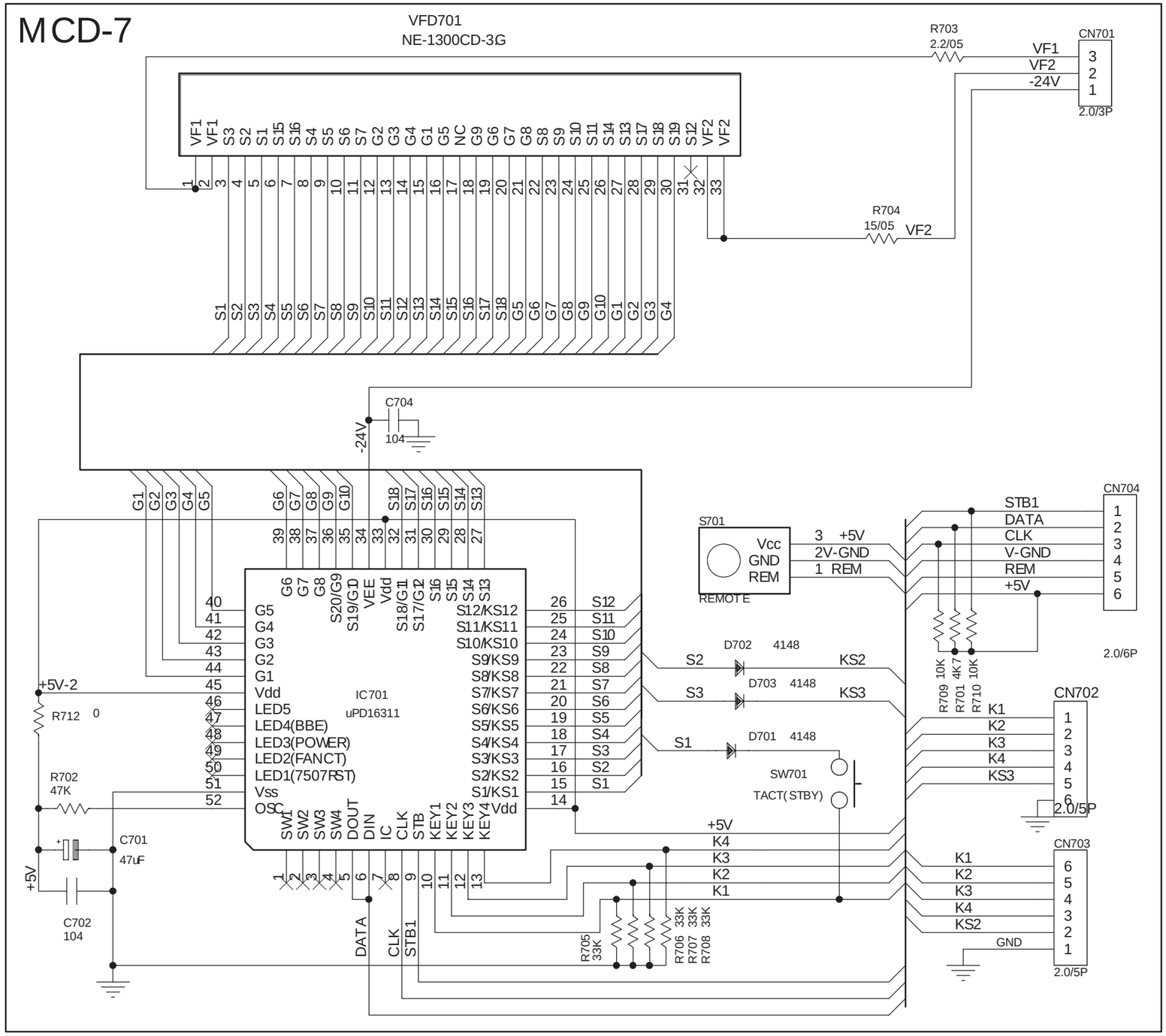

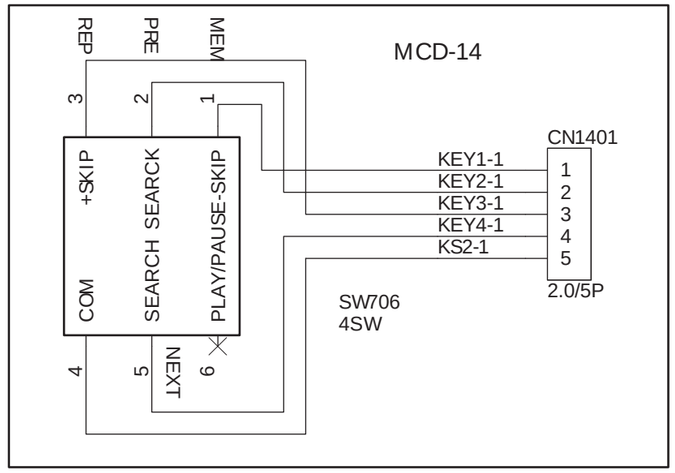

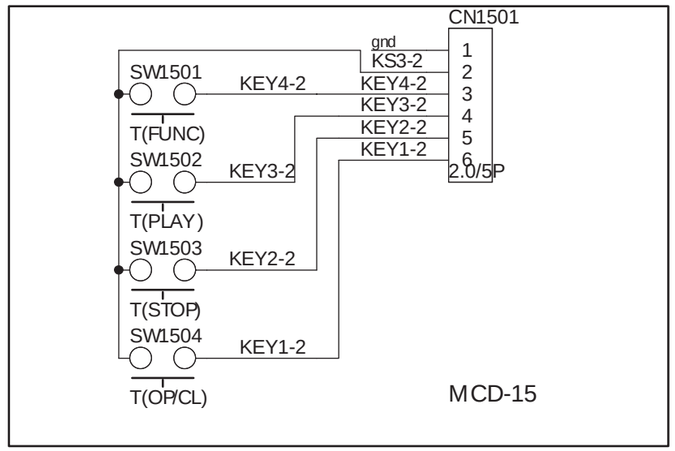

6 - 2

LAYOUT DIAGRAM - VFD / KEY BOARD ASSEMBLY

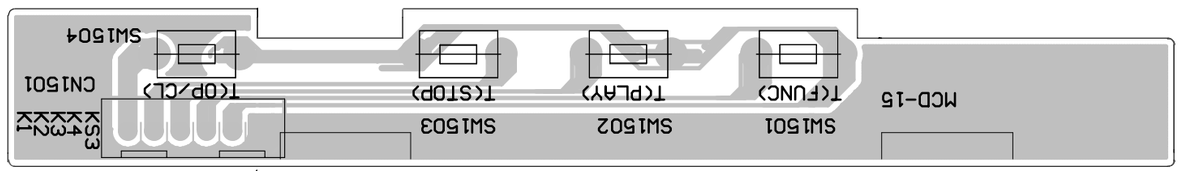

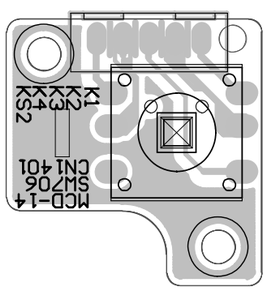

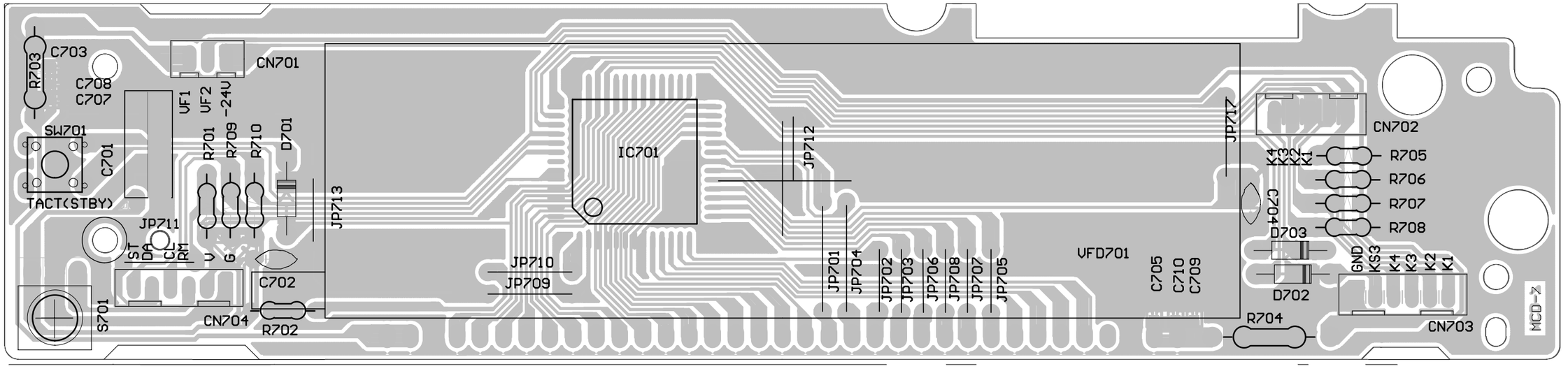

7 - 1

CIRCUIT DIAGRAM - TUNER BOARD

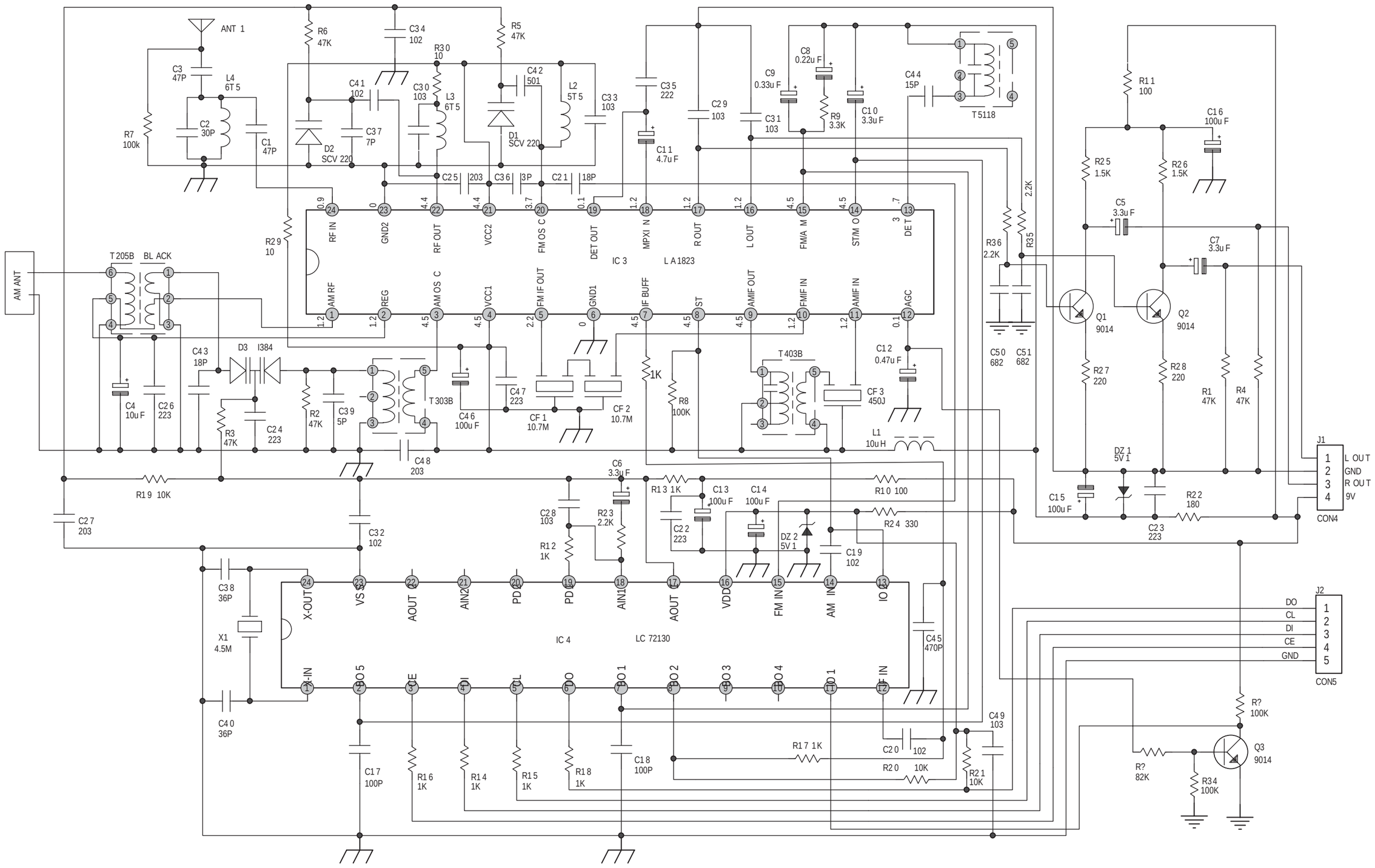

7 - 2

LAYOUT DIAGRAM - TUNER BOARD

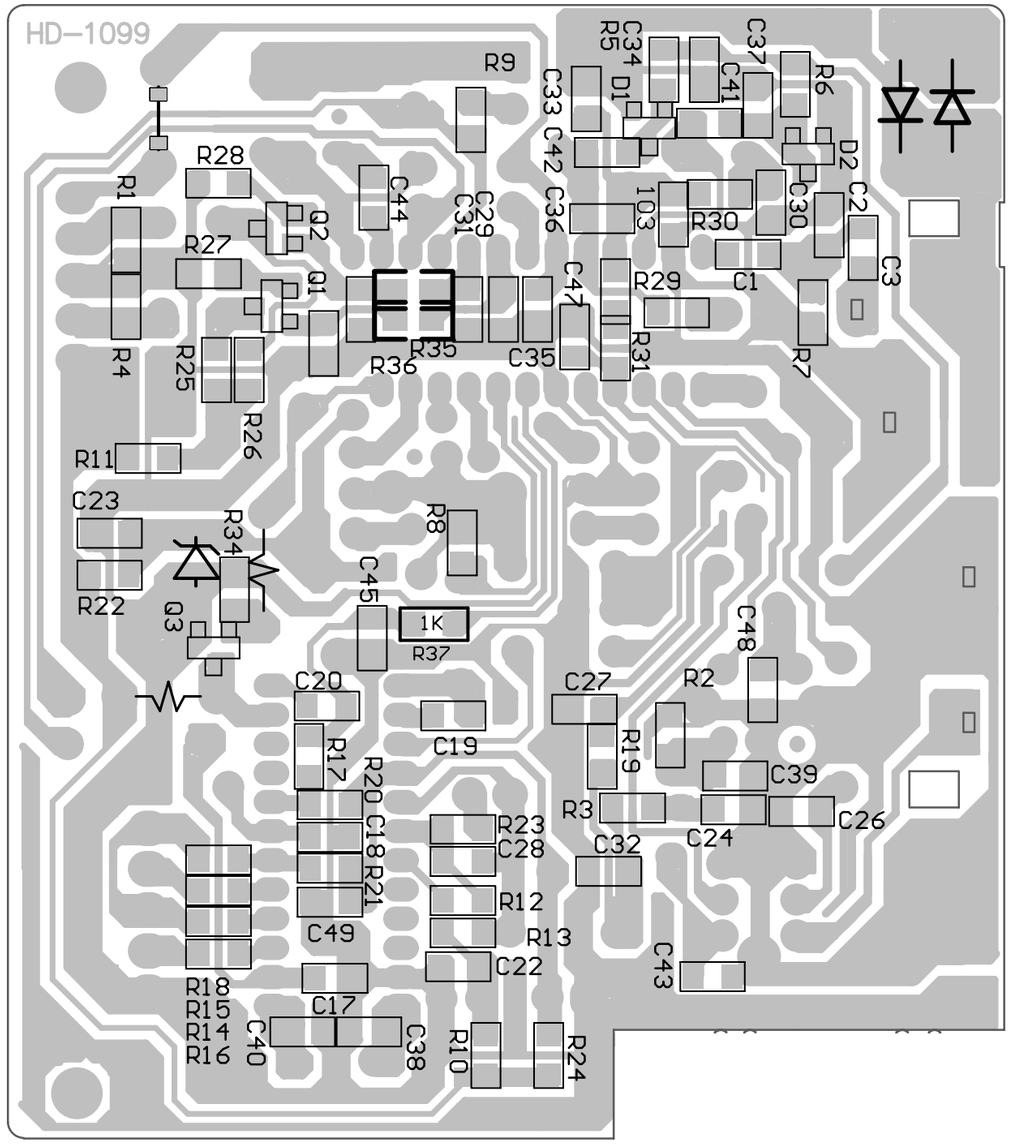

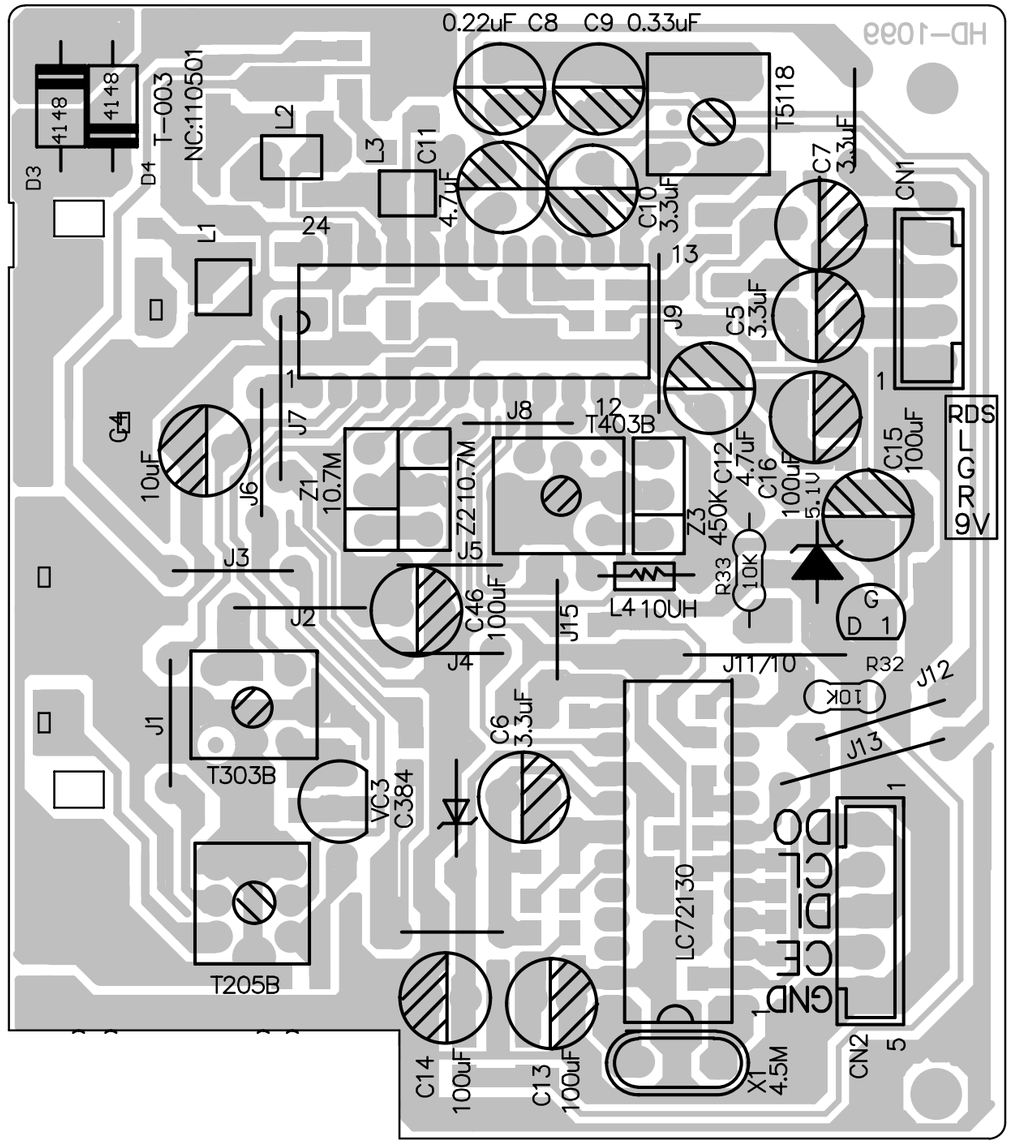

8 - 1

CIRCUIT DIAGRAM - DVD BLOCK

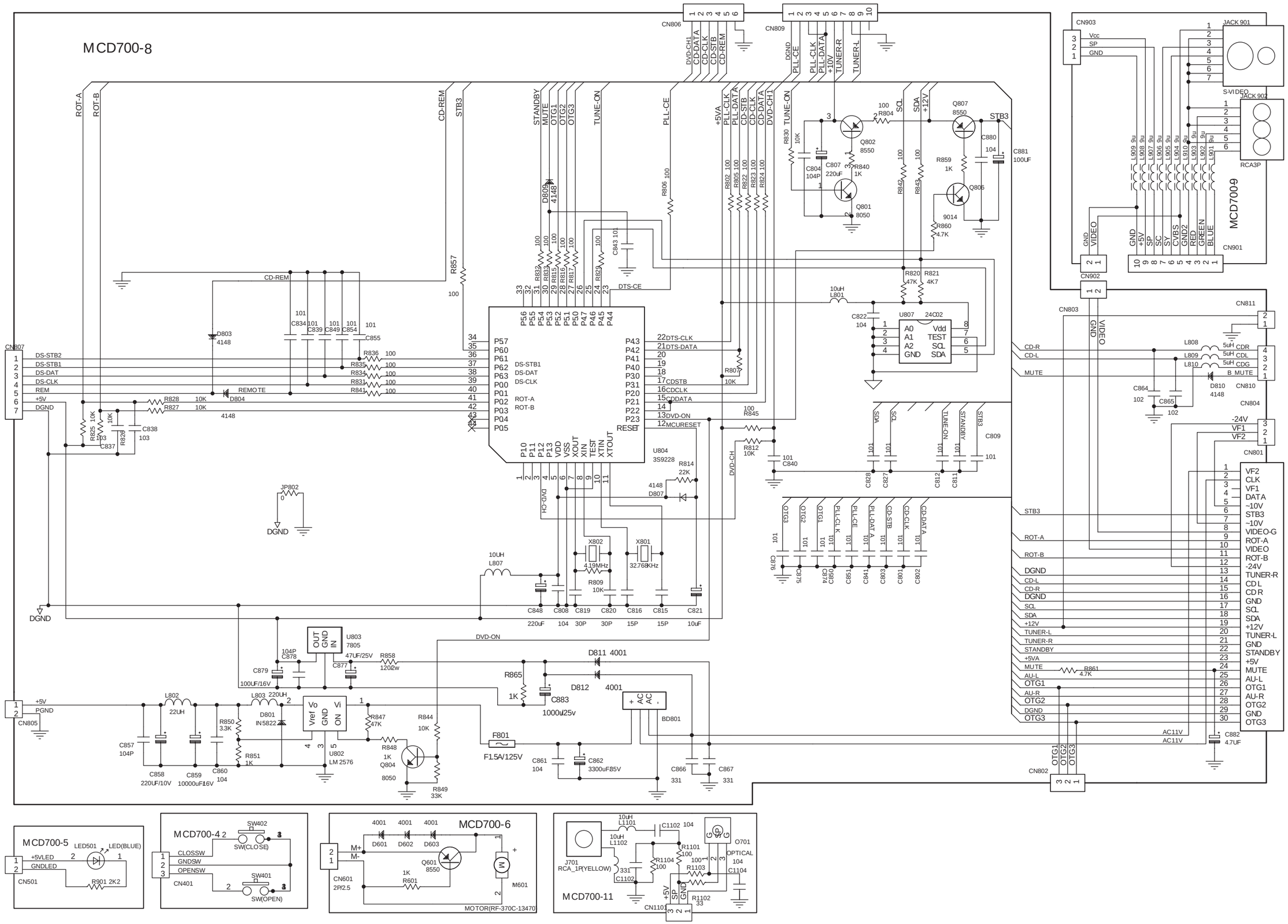

8 - 2

LAYOUT DIAGRAM - DVD BLOCK

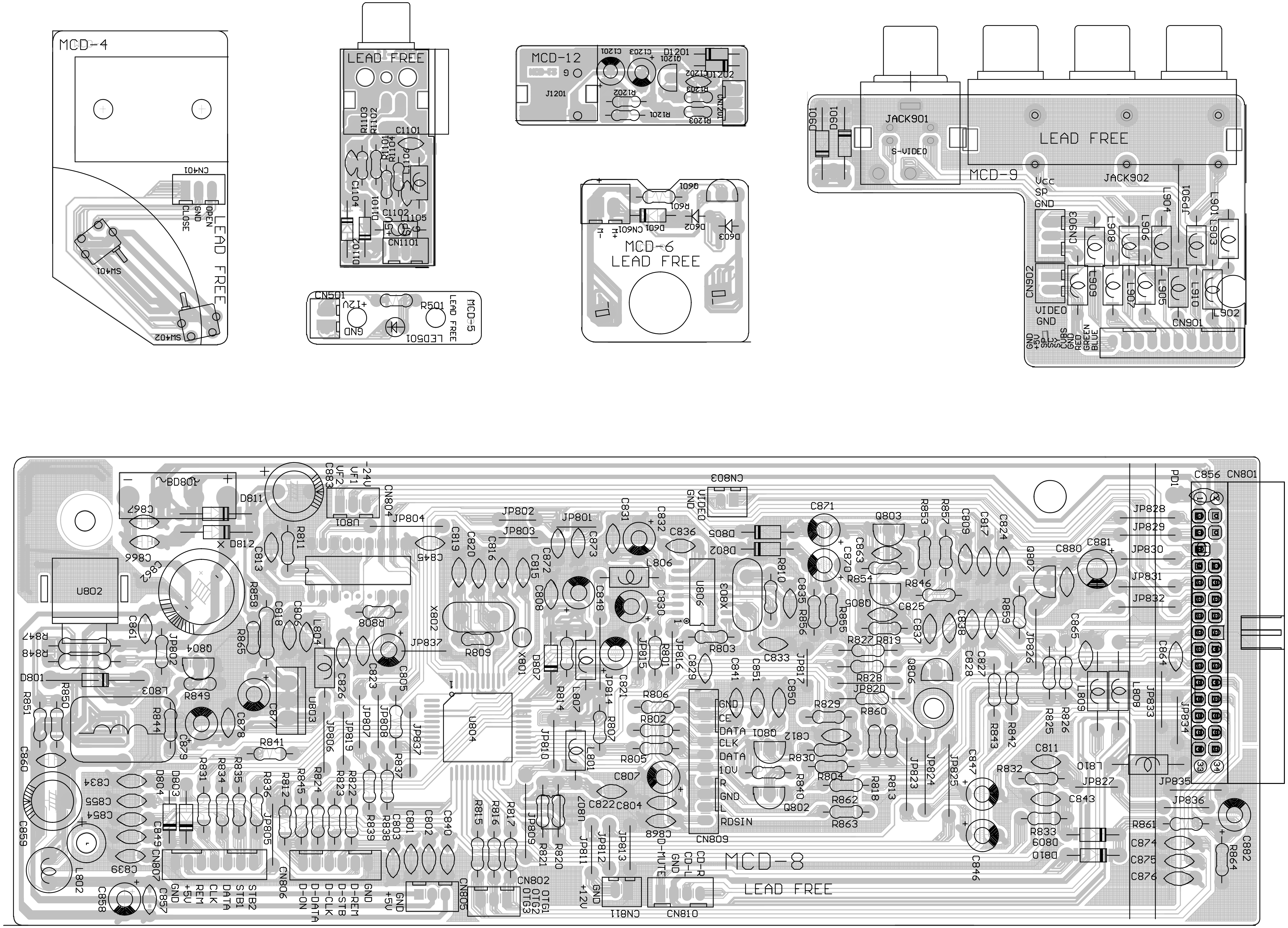

9 - 1

CIRCUIT DIAGRAM - AMP BLOCK

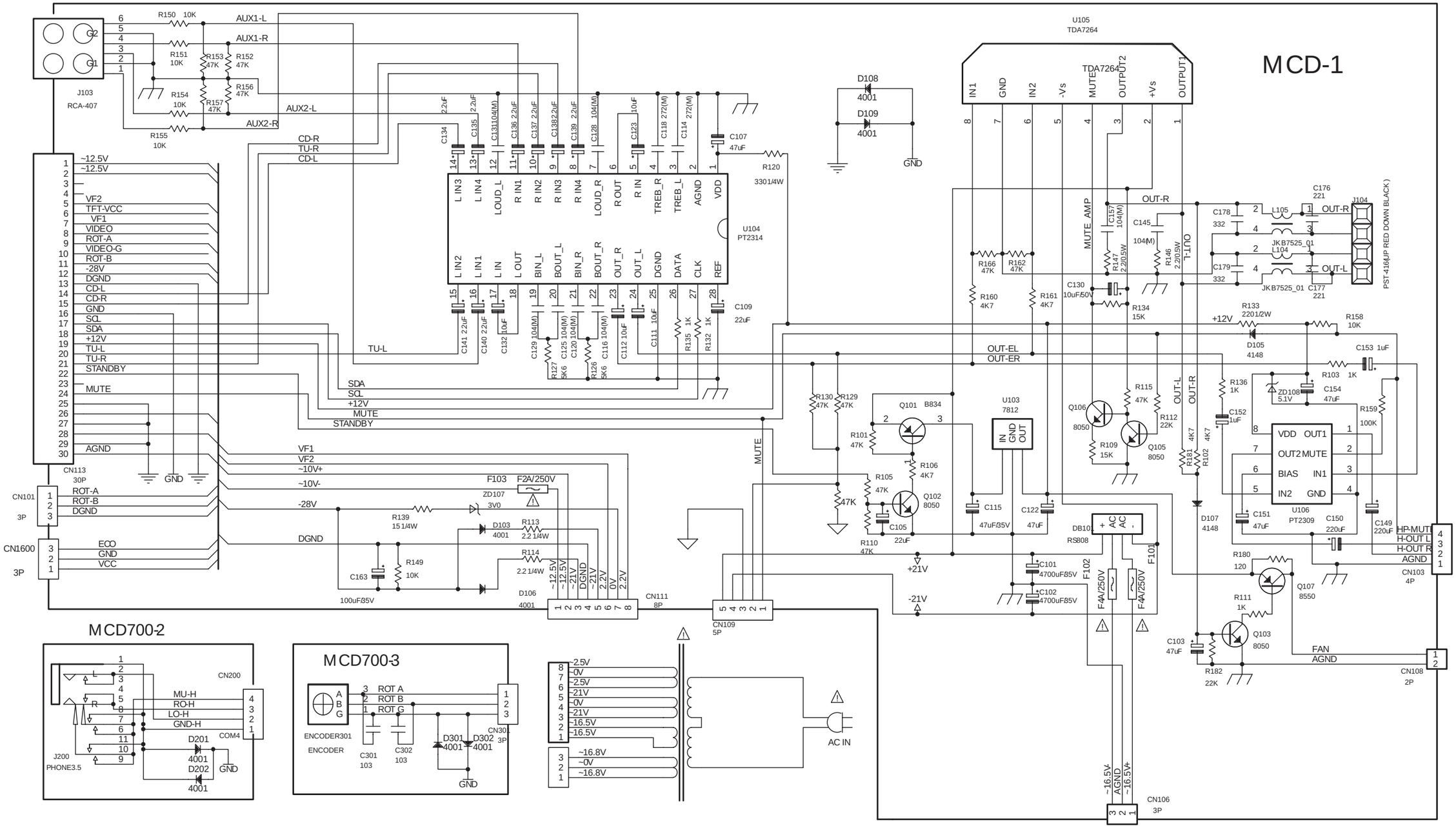

9 - 2

LAYOUT DIAGRAM - AMP BLOCK

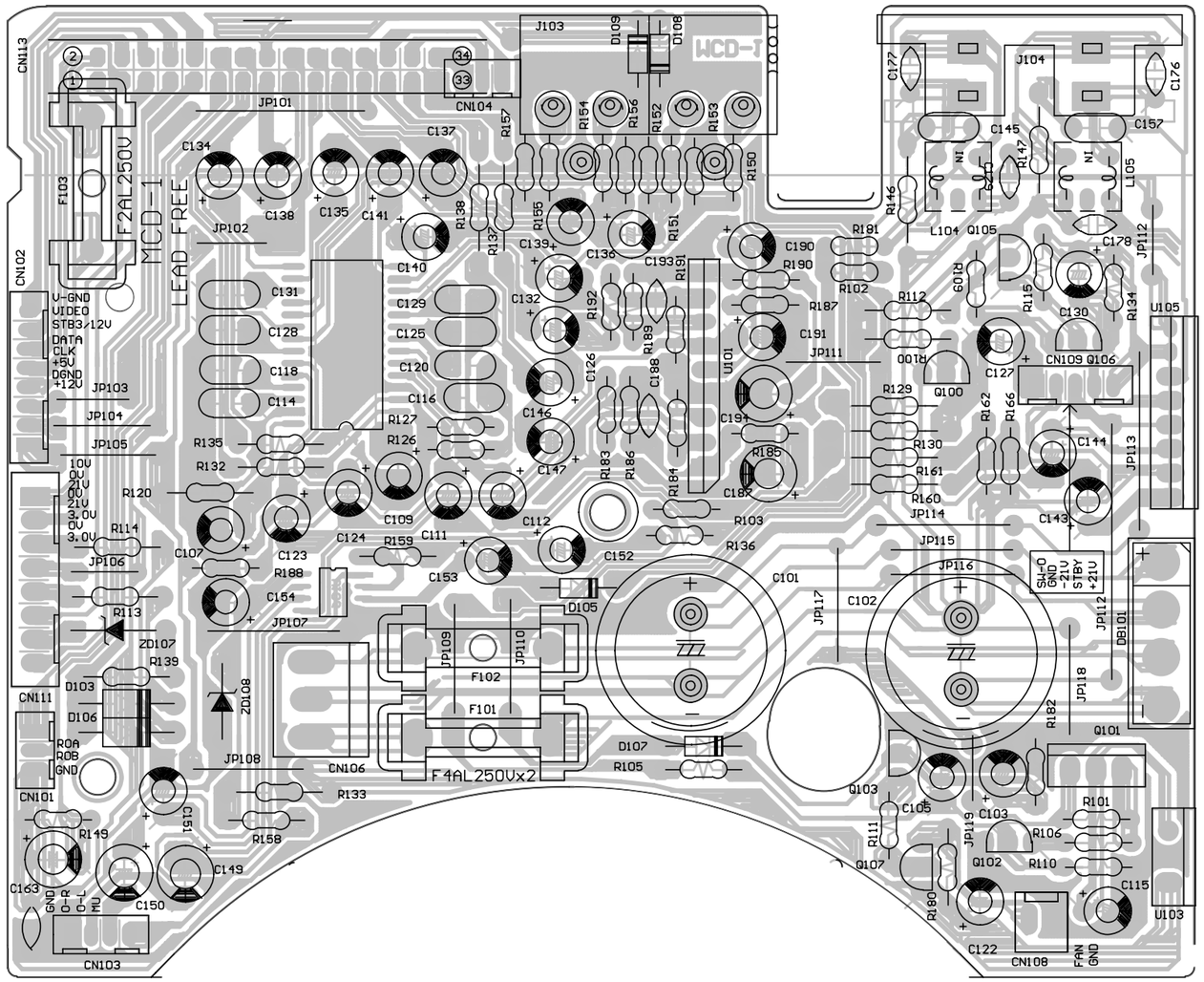

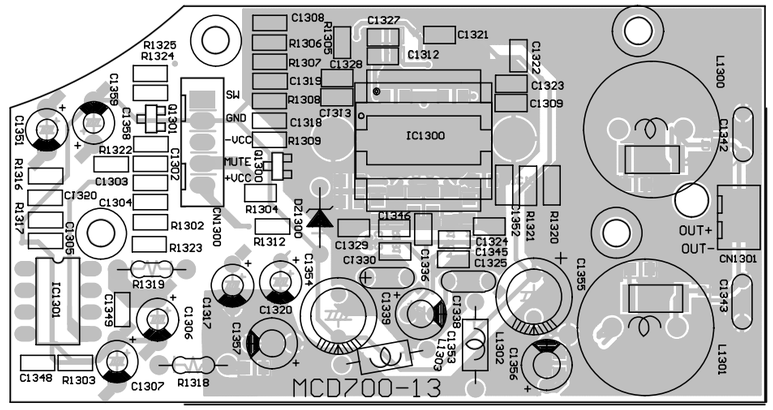

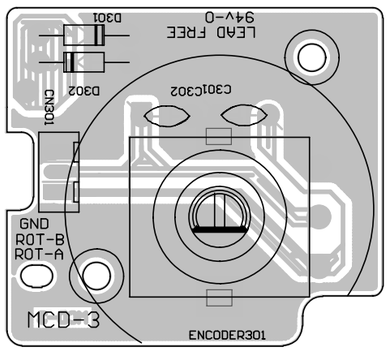

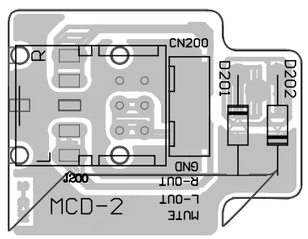

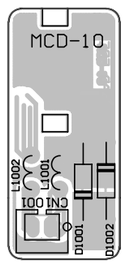

10 - 1

CIRCUIT DIAGRAM - DVD MPEG BOARD

MPEG board is not repaired,program for referrence only.

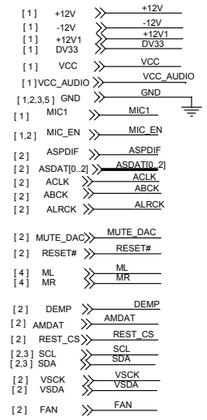

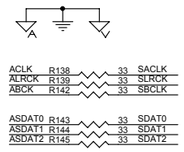

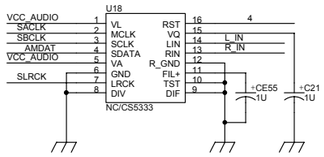

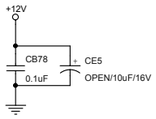

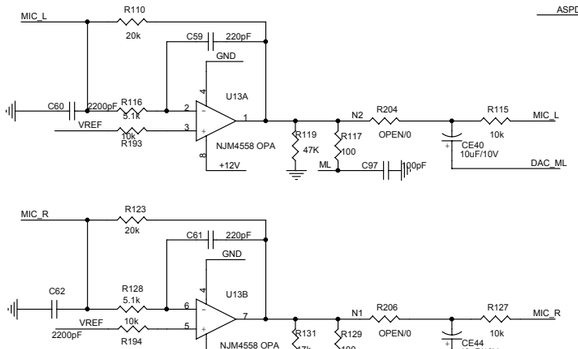

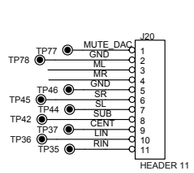

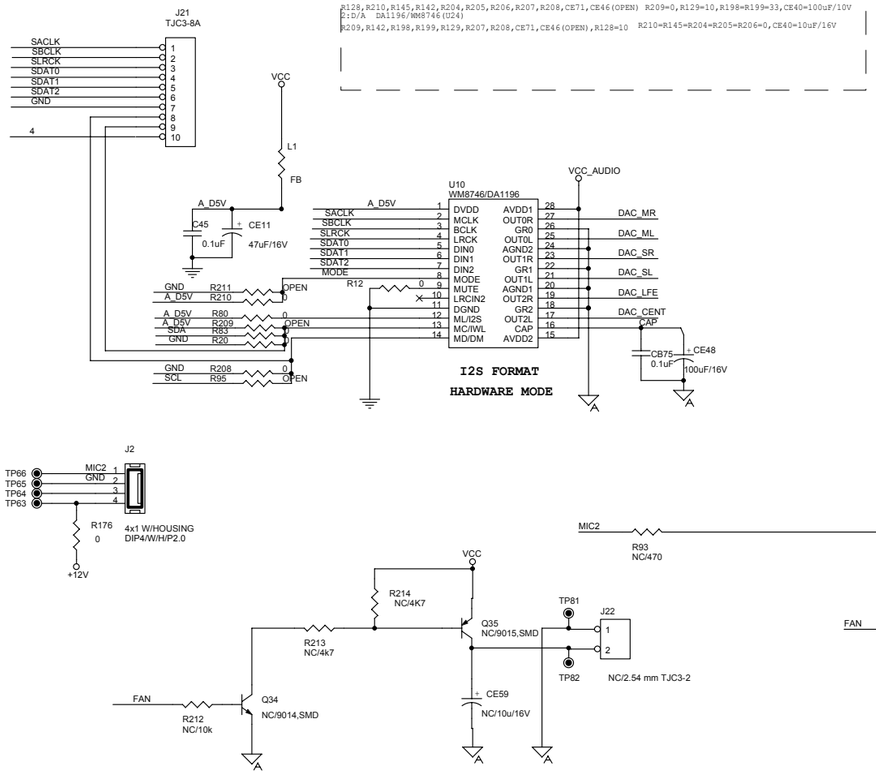

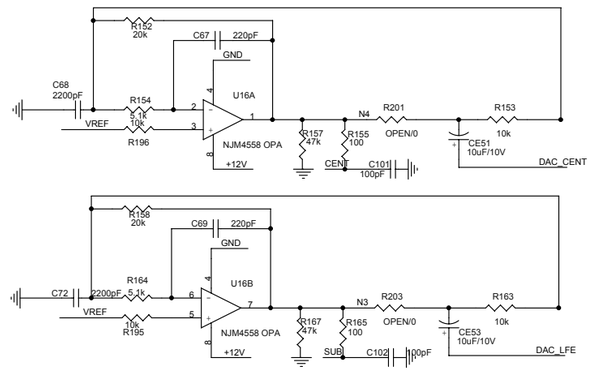

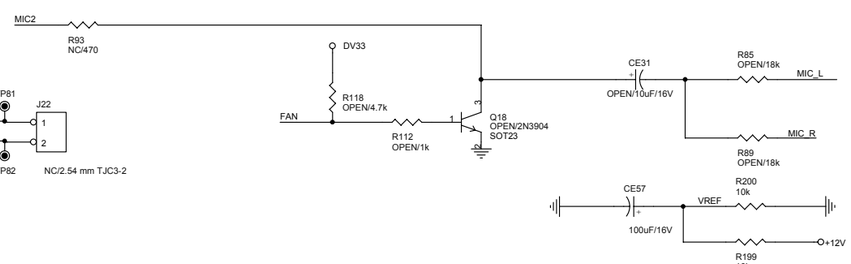

10 - 2

CIRCUIT DIAGRAM - DVD MPEG BOARD

MPEG board is not repaired,program for referrence only.

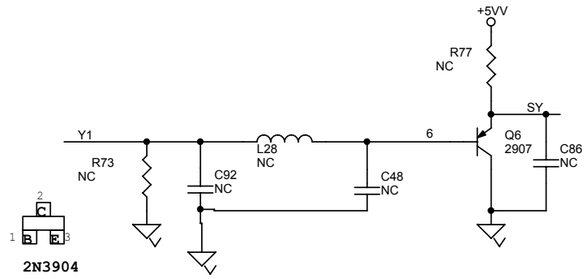

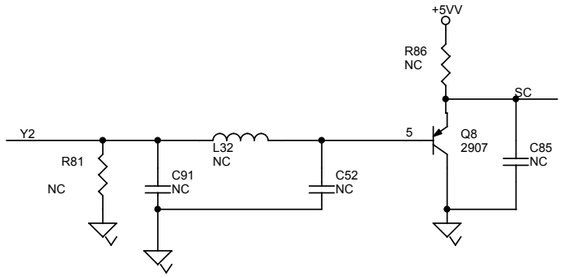

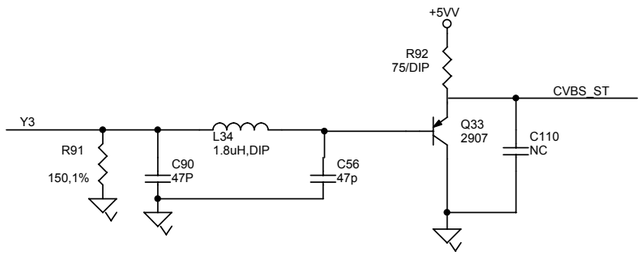

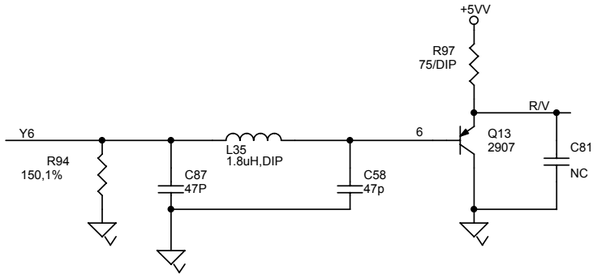

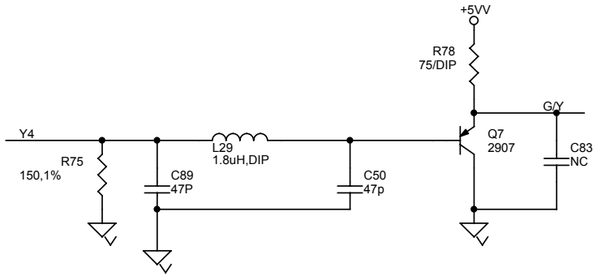

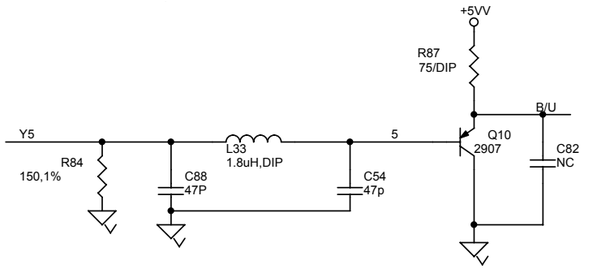

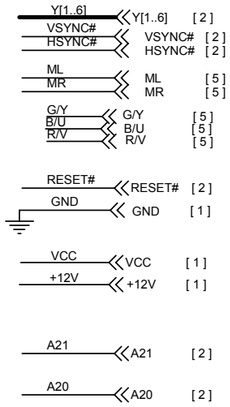

SCART CONNECTOR

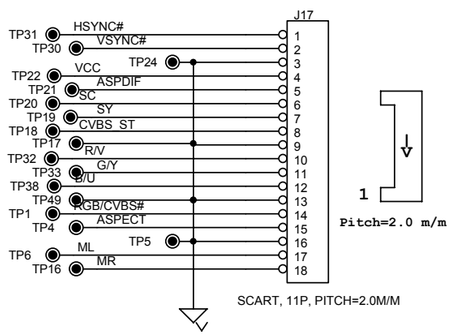

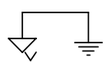

SCART CONTROL

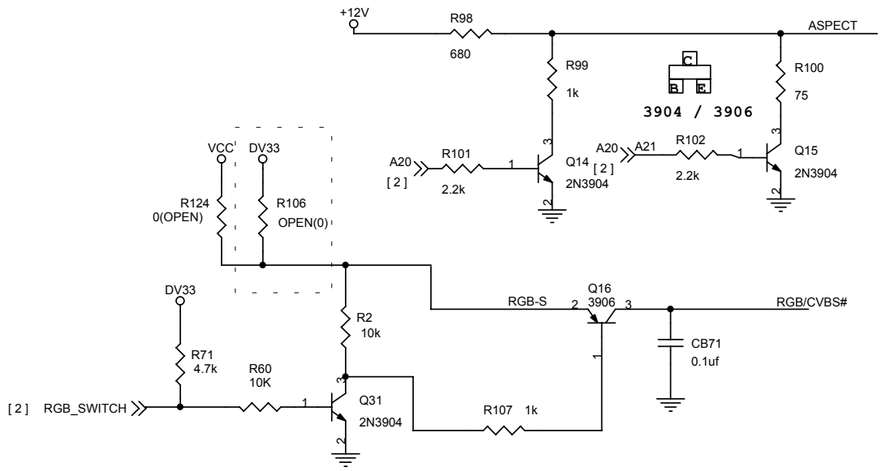

10 - 3

CIRCUIT DIAGRAM - DVD MPEG BOARD

MPEG board is not repaired,program for referrence only.

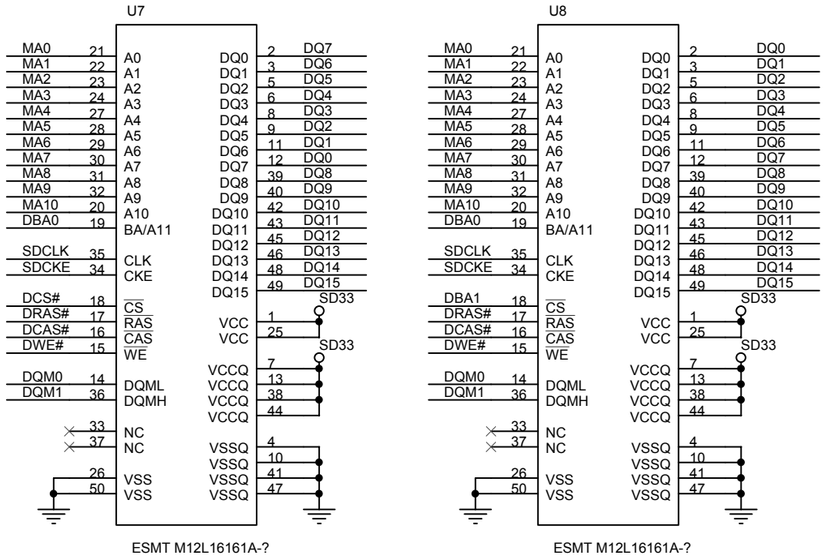

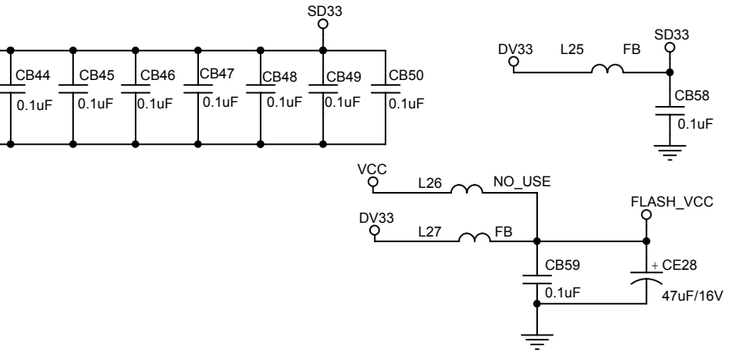

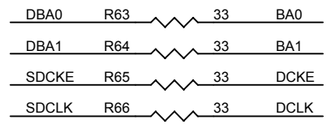

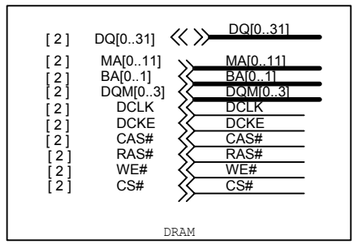

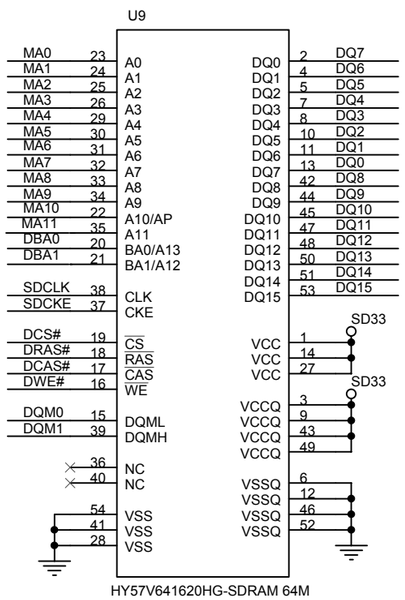

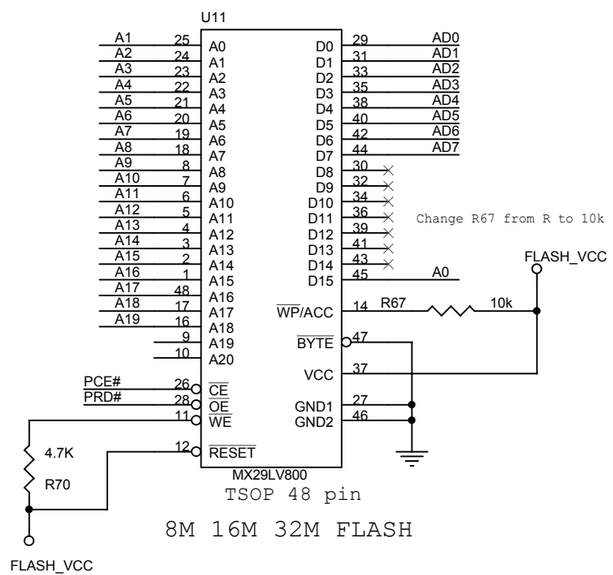

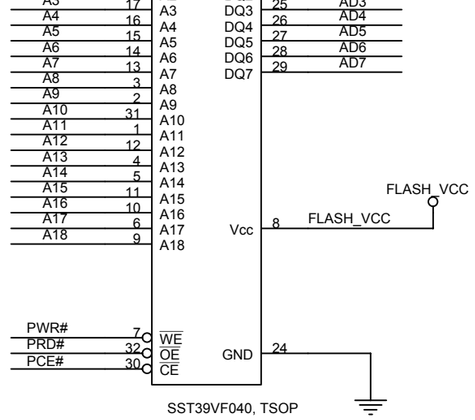

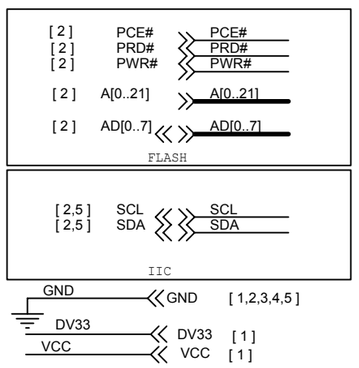

10 - 4

CIRCUIT DIAGRAM - DVD MPEG BOARD

MPEG board is not repaired,program for referrence only.

1 INDEX & POWER, RESET
2 RF, SERVO & MPEG - MT1389E
3 MEMORY - SDRAM, FLASH/EEPROM
4 VIDEO OUT
5 AUDIO DAC WMA8746&WMA8720 AND AUDIO OUT

Rev	History	P#	Date
V1	**The original released.**		2003.6.15
V2	Change CE11 from 10uF to 100uF	1	2003.7.17
	Change C3 from C to 2200pF	2	
	Change C2 from 0.1uF to C	2	
	Change R10,r15 from 750k to 680k	2	
	Change R17,R19 from 390k to 150k	2	
	Add C74 2200pF	2	
	Change R37 from 0 to R	2	
	Change R38 from 0 to R	2	
	Change C32 from 15nF to C	2	
	Change PIN 47 from LIMIT to ADIN	2	
	Add CE1 10uF	2	
	Change R15 from 1.5k to 1.8k	2	
	Remove 74H04	2	
	Change the LIMIT singalfrom PIN 46 to PIN136	2	
	Change R4,R5,R6,R8,R12 from 1k to R	2	
	Chang the TRIN&TROUT pullhigh power from 5V to 3V3	2	
	Add LC circuit	2	
	Change R67 from R to 10k	3	
	Add the low resistance output circuit	4	
	Change spdif output port	5	
	Add the Audio DAC power to reference filtering	5	

NAME	TYPE	DEVICE
VCC	Digital 5V	SUPPLY
DV33	Digital 3.3V	MT1389E
RFV33	Servo 3.3V	MT1389E
LDO_AV33	Laser Diode 3.3V	
AVCC	RF 5V	PICKUP HEADER
V18	Digital 1.8V	MT1389E
SD33	Digital 3.3V	SDRAM
+12V	Audio +12V	OP AMP.
-12V	Audio -12V	OP AMP.
AVDD	Audio 5V	Audio DAC
DVDD	Audio 5V	Audio DAC

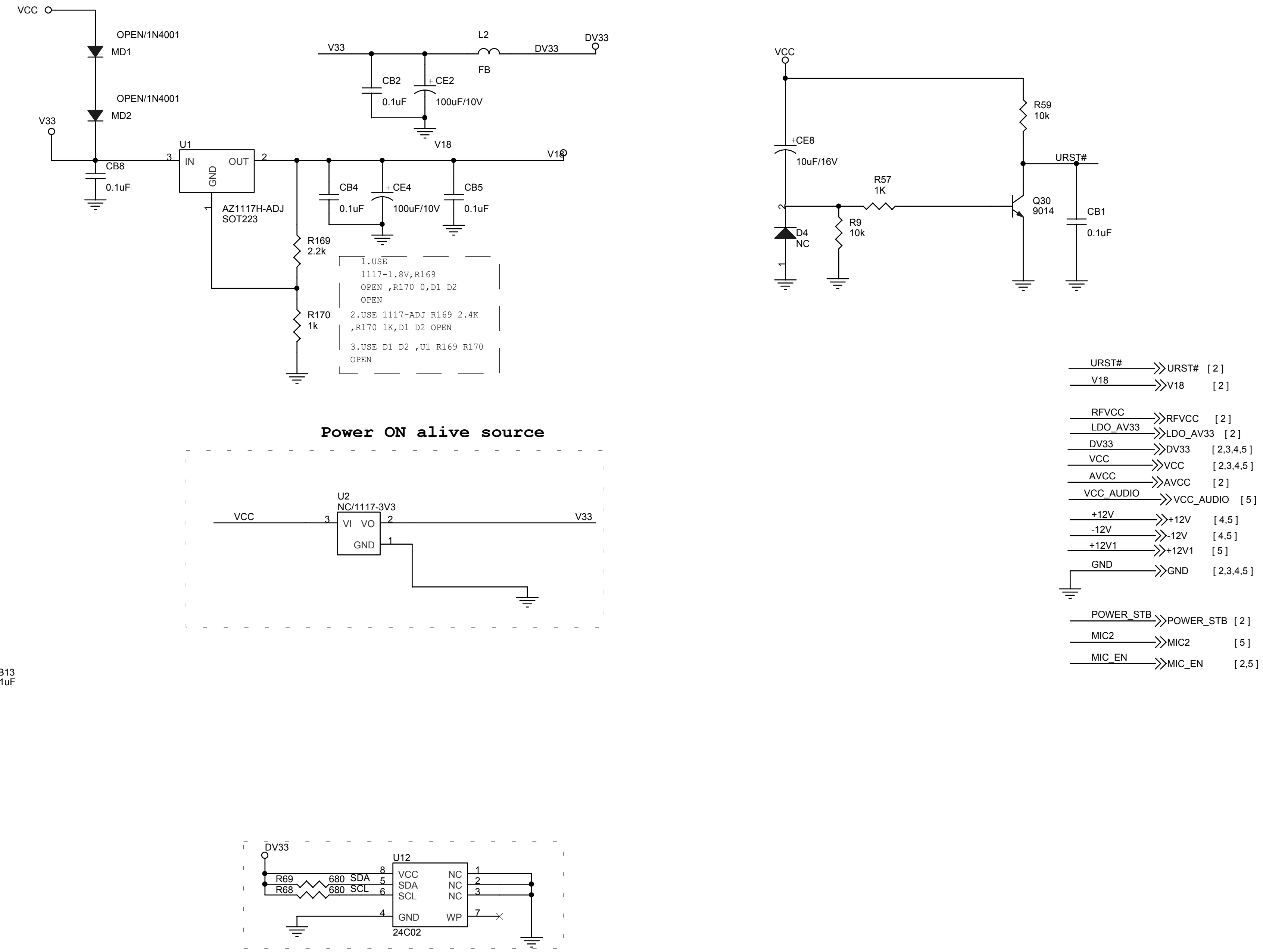

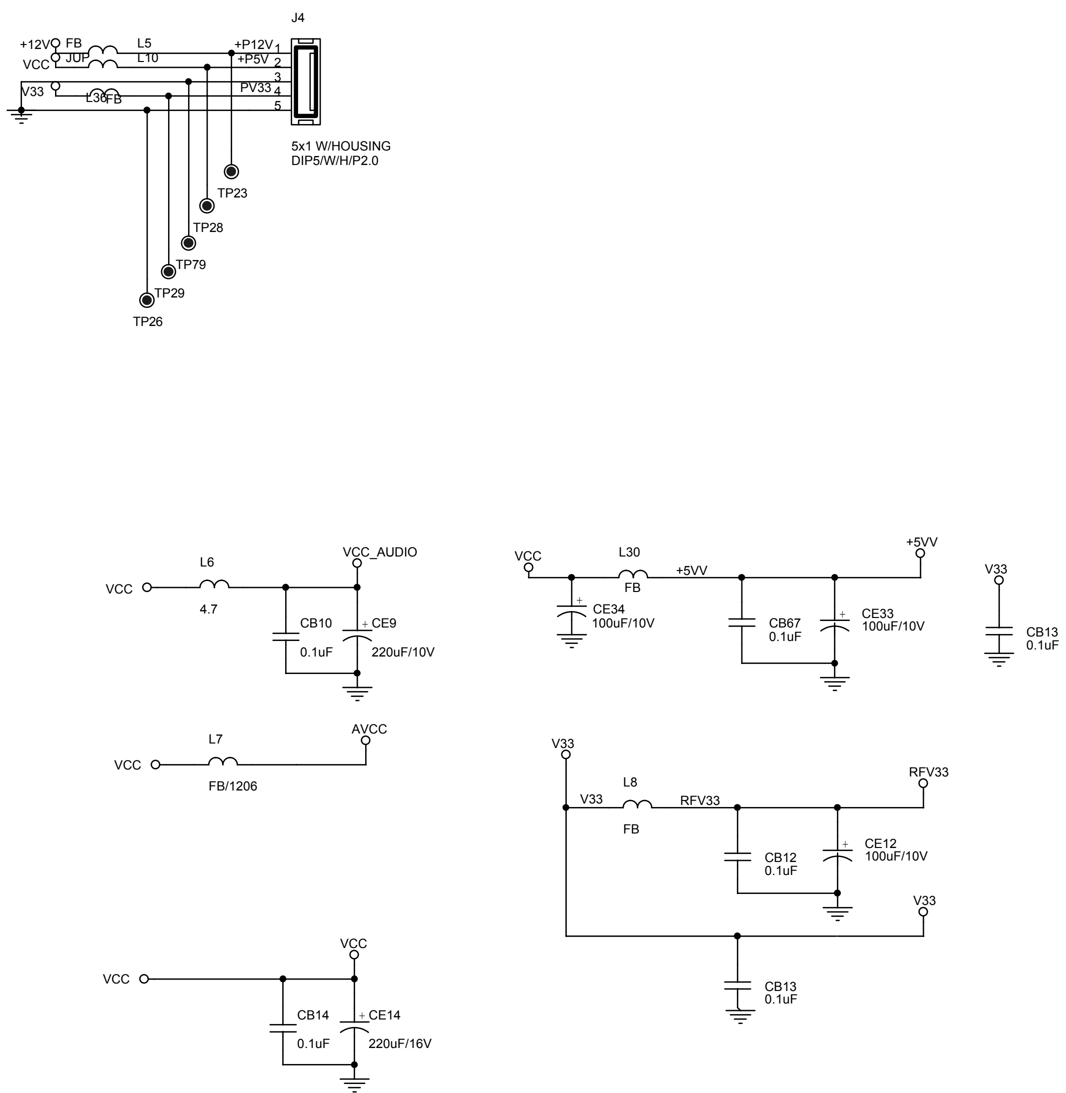

10 - 5

CIRCUIT DIAGRAM - DVD MPEG BOARD

MPEG board is not repaired,program for referrence only.

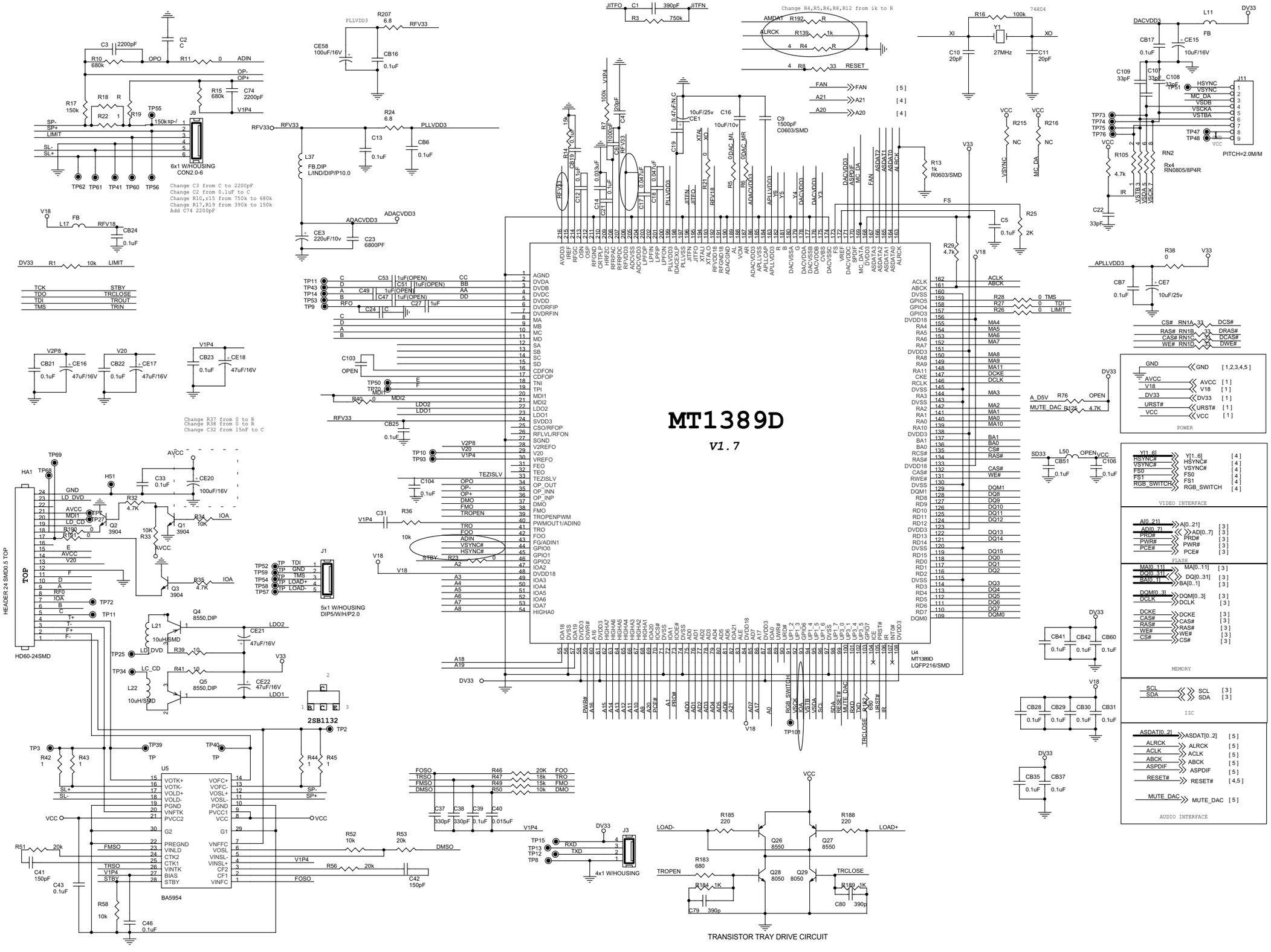

10 - 6

LAYOUT DIAGRAM - DVD MPEG BOARD

MPEG board is not repaired,program for referrence only.

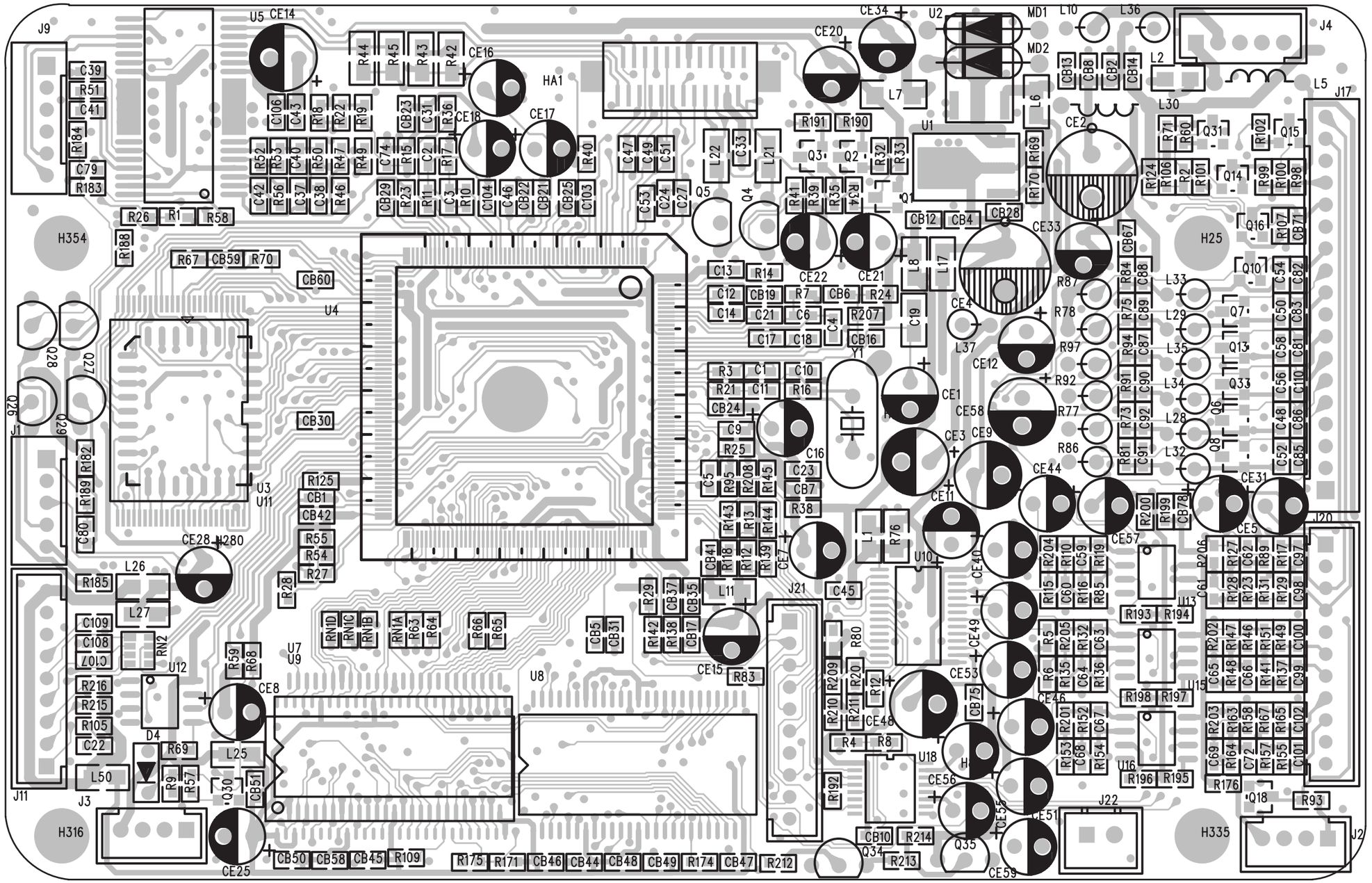

EXPLODED VIEW DIAGRAM

AMP PART

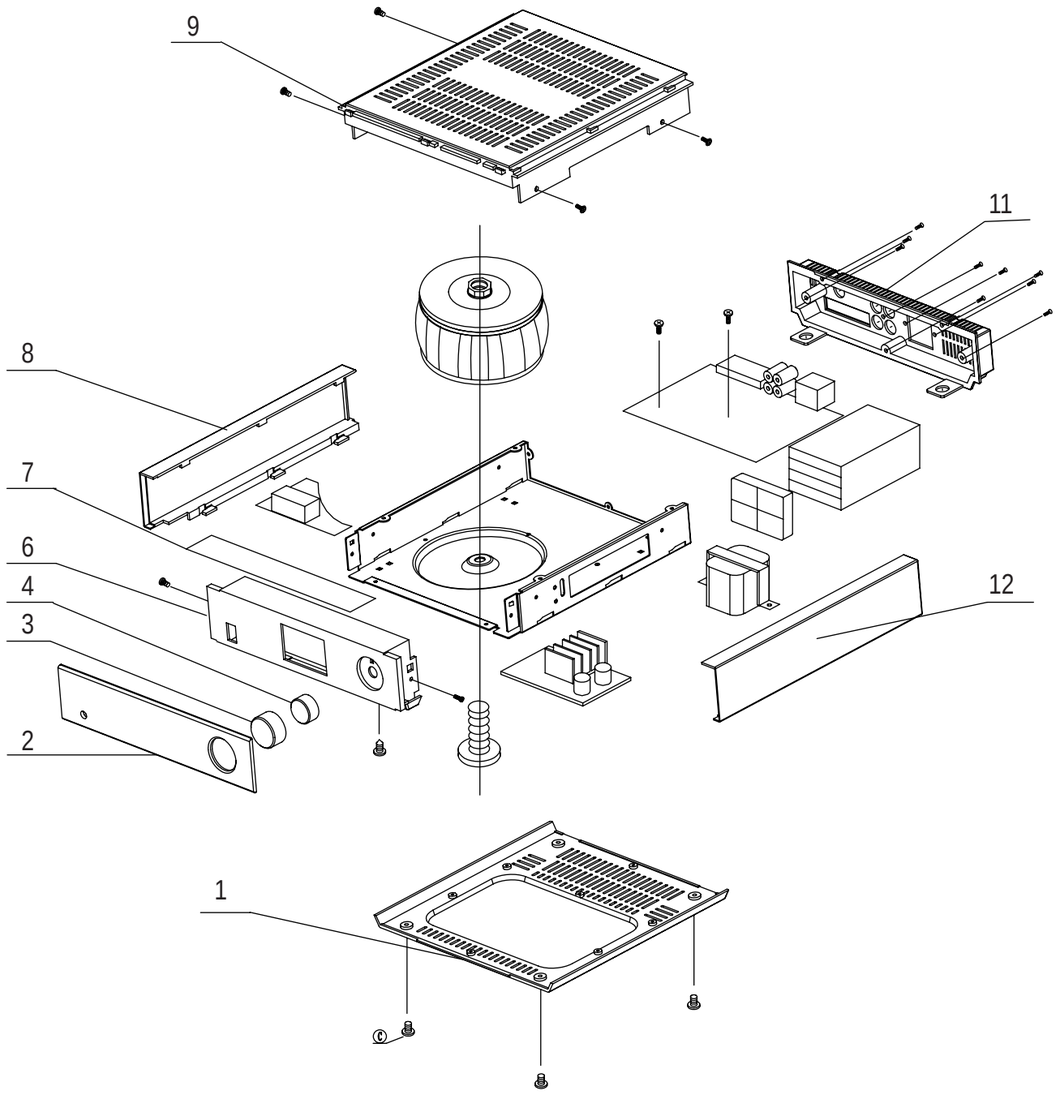

11 - 1

DVD PART

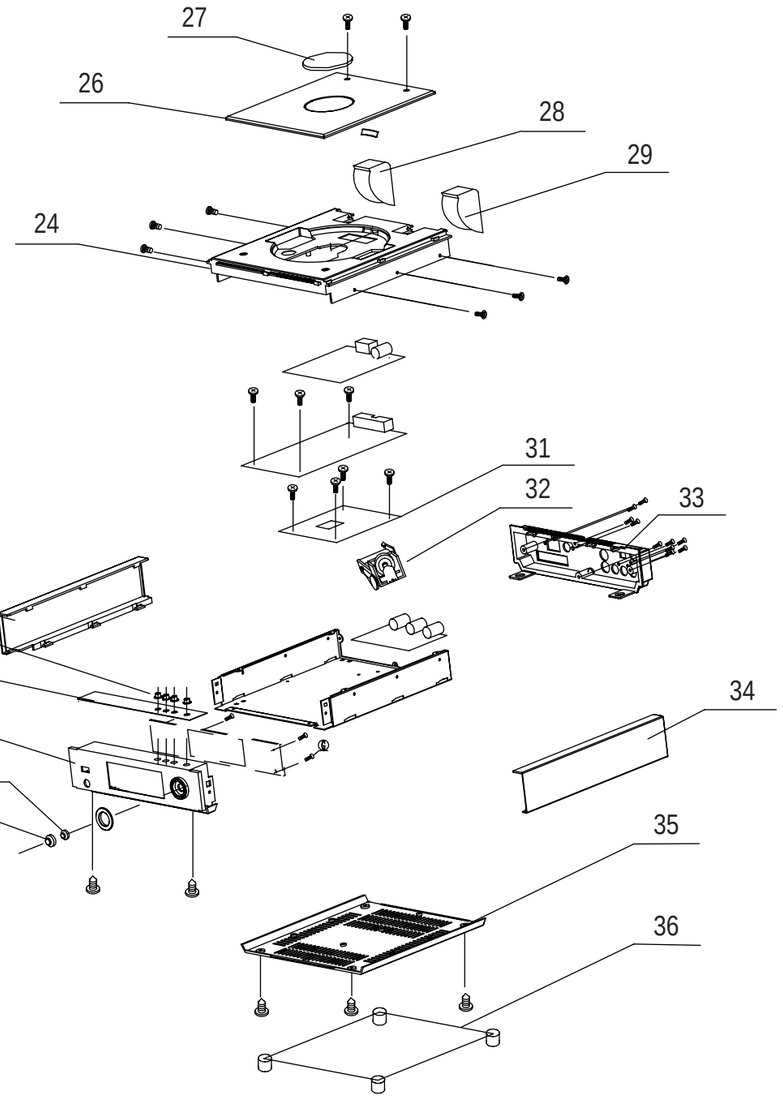

ACCESSORIES

994000003071	SPEAKER BOX ASS'Y -/37
994000005222	SPEAKER BOX ASS'Y -/98
994000005225	SPEAKER BOX ASS'Y -/55
994000005073	WOOFER ASS'Y -/37/55
994000005223	WOOFER ASS'Y -/98
994000005074	SPEAKER WIRE 2m
994000003506	SPEAKER WIRE 1,5m
994000003497	REMOTE HANDSET -/37
994000005224	REMOTE HANDSET -/98
994000005226	REMOTE HANDSET -/55
994000005075	PH(MCD700)BRACKET ASS'Y
994000005078	AUDIO SINGLE WIRE
994000004178	CONTROL CABLE 30P
994000003516	FM ANT 1P WIRE 1,5m
994000003517	SINGLE JUMPER WIRE
994000002562	1300 ANTENNA HOLDER BLACK

MECHANICAL PARTSLIST

AMP PART

1	994000002483	AMP CABINET BOTTOM
2	994000005079	AMP UNIT DISPLAY LENS
3	994000002496	VOLUME KNOB
4	994000002501	OVERLAY FOR KNOB
6	994000003072	AMP CABINET FRONT -/37
6	994000002476	AMP CABINET FRONT -/98/55
7	994000002502	CABINET TOP PLATE
8	994000003075	SIDE PLATE-L -/37
8	994000002498	SIDE PLATE L -/98/55
9	994000003073	AMP CABINET TOP -/37
9	994000002478	AMP CABINET TOP -/98/55
11	994000003074	AMP CABINET BACK -/98/37
11	994000005227	AMP CABINET BACK -/55
12	994000003076	SIDE PLATE-R -/37
12	994000002499	SIDE PLATE R -/98/55

11 - 2

MECHANICAL PARTSLIST

DVD PART

13	994000002493	DVD UNIT DISPLAY LENS
14	994000002497	POWER MULTI BOTTON
16	994000002495	SWITCH PUSH KNOB
17	994000002505	FUNCTION KNOB METAL RING
18	994000003079	DVD FRONT CABINET -/37
18	994000002477	DVD FRONT CABINET -/98/55
19	994000002503	DVD UNIT PUSH KEY PLATE
21	994000002506	OVERLAY FOR FUNCTION KNOB
22	994000002494	MULTI BUTTON
23	994000003075	SIDE PLATE-L -/37
23	994000002498	SIDE PLATE L -/98/55
24	994000003081	DVD TOP CABINET -/37
24	994000002479	DVD TOP CABINET -/98/55
26	994000002485	DVD DOOR
27	994000002504	CD/DVD DOOR DECOATIVE SHEET
28	994000002488	1300 CD DOOR BRACKET(L)
29	994000002489	1300 CD DOOR BRACKET(R)
31	994000002514	DVD DECODER CARD 89D18(2.0CH)
32	994000002491	WORM PREFORMING NE-1300 ASS'Y
33	994000003082	DVD CABINET BACK -/98/37
33	994000002482	MCD700 DVD CABINET BACK -/55
34	994000003076	SIDE PLATE-R -/37
34	994000002499	SIDE PLATE R -/98/55
35	994000002484	DVD CABINET BOTTOM
35	994000005081	RUBBER FOOT MCD700
	994000002487	1300 WORM & WORM WHEEL BRACKET
	994000003185	DVD MECHA. SHOCKPROOF WASHER
	994000002511	LEATHER BELT NE-1300
	994000002563	DVD MECHANISM IDM520A

Note: Only these parts mentioned in the list are normal service parts.

ELECTRICAL PARTSLIST - DVD BOX

- MISCELLANEOUS -

X1	994000003163	CRYSTAL OSC FREQ. 4,5MHz H3
X801	994000002551	CRYSTAL OSC FREQ.32,768KHz
X802	994000003152	FILTER FREQUENCY 4,19MHz
J1101	994000002556	OPTICAL & COAXIAL TERMINAL
JAK901	994000002554	S-Video + SINGLE RCA SOCKET
JAK902	994000002553	RCA SOCKET 3P
JP818 ⚠	994000003412	FUSE F1,5A/125V
S701	994000002542	IR SENSOR BLACK
SW1501	994000002555	LIGHT TOUCH SWITCH
SW1502	994000002555	LIGHT TOUCH SWITCH
SW1503	994000002555	LIGHT TOUCH SWITCH
SW1504	994000002555	LIGHT TOUCH SWITCH
SW701	994000002543	LIGHT TOUCH SWITCH
SW706	994000002557	SWITCH(4-DIRECTIONS)
	994000003435	ANT. LEADING-OUT TERMINAL
	994000002541	VFD DISPLAY
	994000005068	DOOR SWITCH
	994000002513	TUNER PCB ASS'Y
	994000005071	CPU PCB ASS'Y -/37
	994000005216	CPU PCB ASS'Y -/98/55

- DIODES -

BD801	994000002521	THYRISTOR RS406(4A)
D1	994000003154	VARIODE DIODE SCV220
D2	994000003154	VARIODE DIODE SCV220
D3	994000003155	VARIODE DIODE I348 L13
D801	994000002544	RECTIFIER DIODE 5822
LED	994000002537	LED LAMP(BLUE)
	994000005215	LED DIODE RED -/98/55

- COILS & FILTERS -

T1	994000003149	I.F.T. COIL 511BE
T2	994000003148	I.F.T. COIL 403B
T3	994000003146	I.F.T. COIL 205B
T4	994000003147	I.F.T. COIL 303B
Z1	994000003153	FM CER.FILTER 10,7MHz 3P
Z2	994000003153	FM CER.FILTER 10,7MHz 3P
Z3	994000003151	AM FILTER 450J MG(3 PINS)

- IC & TRANSISTORS -

IC3	994000003158	IC LC72130 & LA1823
IC4	994000003158	IC LC72130 & LA1823
IC701	994000002539	IC PT6311/SC16311/CD16311
Q1	994000003156	CHIP TRANSISTOR 9014
Q2	994000003156	CHIP TRANSISTOR 9014

ELECTRICAL PARTSLIST - DVD BOX

- IC & TRANSISTORS -

Q3	994000003156	CHIP TRANSISTOR 9014
Q601	994000002519	TRANSISTOR 8550C-5
Q801	994000002518	TRANSISTOR 8050C-5
Q804	994000002518	TRANSISTOR 8050C-5
Q802	994000002519	TRANSISTOR 8550C-5
U802	994000002546	IC YD2576-ADJ
U803	994000002548	IC LM7805/LM340T5 7805
U804	994000002549	CPU U252(3P9228 XYZ)
U807	994000002547	IC AT24C02-PC27(2.7V)

Note: Only these parts mentioned in the list are normal service parts.

ELECTRICAL PARTSLIST - AMP BOX

- MISCELLANEOUS -

F101	⚠	994000002531	FUSE F4AL250V -/37
F102	⚠	994000002531	FUSE F4AL250V -/37
F101	⚠	994000003433	FUSE F6,3AL250V -/98/55
F102	⚠	994000003433	FUSE F6,3AL250V -/98/55
F103	⚠	994000002529	FUSE F2AL250V
JP117	⚠	994000003412	FUSE F1,5A/125V -/98/55
J1001		994000005069	COAXIAL-CABLE TERMINAL
COD301		994000002535	CODER ED-1612-00-F15
J103		994000002528	4PINS RCA SOCKET
J104		994000002527	4PINS SPEAKER SOCKET
J200		994000002534	HEADPHONE JACK J35-06B
RE1600		994000003509	RELAY 10A 240VAC/30VDC -/37
SW401		994000002536	SPECIAL SW. TC-V030A
SW402		994000002536	SPECIAL SW. TC-V030A
		994000002566	SWITCH -/98/55
		994000002532	MINI FAN RDM4010S DC12V
		994000002573	FERRITE CORE JTH16X12X8
		994000005076	FERRITE CORE JTH29X19X15
	⚠	994000005072	POWER TRANSF. ECO-228A-37 -/37
	⚠	994000005077	POWER TRANSF. 120V/60 -/37
	⚠	994000005217	POWER TRANSF. 120/230V -/98/55
	⚠	994000003078	AC LINE CORD 1,95m -/37
	⚠	994000005218	AC LINE CORD 1,95m -/98/55
		994000005064	AMP PCB ASS'Y-/37
		994000005219	AMP PCB ASS'Y -/98/55

- DIODES -

ZD107	994000002515	ZENER DIODE 3V 1/2W-52
DZ1300	994000003417	ZENER DIODE 5,6V 1/2W-52
D101	994000002521	THYRISTOR RS406(4A)
D101	994000003502	THYRISTOR RS808 -/98/55

- IC & TRANSISTORS -

Q100	994000002518	TRANSISTOR 8050C-5
Q102	994000002518	TRANSISTOR 8050C-5
Q103	994000002518	TRANSISTOR 8050C-5
Q105	994000002518	TRANSISTOR 8050C-5
Q106	994000002518	TRANSISTOR 8050C-5
Q101	994000002517	TRANSISTOR 2SB772A
Q107	994000002519	TRANSISTOR 8550C-5
Q1600	994000002518	TRANSISTOR 8050C-5
IC1301	994000004669	IC TL072
IC1300	994000003422	CHIP IC TDA8920
U101	994000003427	IC NE008
U103	994000005067	IC 7812
U104	994000005066	I.C.PT2314 PRINCETON
U105	994000005065	IC TDA7264
U106	994000002524	IC PT2309-S(L) SOP
U1	994000005221	IC TM58PR11S18C -/98/55

Note: Only these parts mentioned in the list are normal service parts.

REVISION LIST

Version 1.0 (3141 785 30930)
* Initial Release MCD703/37

Version 1.1 (3141 785 30931)
* New versions /98,/55 are introduced.
* Page 11-2 : Mechanical parts list adapted.
* Page 12-1 to 12-3 : Electrical parts list adapted.